Humanities & Social Sciences Communications

ARTICLE

https://doi.org/10.1057/s41599-023-01794-9 OPEN

Identifying the impact of employer branding in the retention of nurses: the mediating role of organizational culture and career development

Ridhya Goyal[1]✉ & Gurvinder Kaur[1]

Human resource professionals design and implement various strategies to retain the workforce within an organization. One of the strategies called "employer branding," has recently gripped their focus. Its role has been highlighted in this study in order to determine the retention of nurses in the organization and to investigate the mediation of organizational culture and career development using social identity theory as a theoretical foundation. For this purpose, a sample of 628 nurse respondents bearing different designations from different departments of private hospitals in northern India was included to test the hypothesis using a structured questionnaire. The impact was examined using structural equations through Partial Least Square Structural Equation Modelling. The findings showed a positive effect of employer branding on retention and the existence of a complementary mediation relationship when organizational culture and career development were included as mediators. This study is beneficial for human resource professionals and the healthcare sector as it promotes the idea of staff retention which is a significant challenge today.

[1] School of Humanities & Social Sciences, Thapar Institute of Engineering & Technology, Patiala, India. ✉email: rsain_phd19@thapar.edu

Introduction

Employer Branding(EB) is a consequence of applying a marketing approach to managing human resources (Basha et al. 2020; Singh and Rokade, 2014). The term EB came into existence in the late nineties when the authors Tim Ambler and Simon Barrow gave its first formal definition as "the functional, economic, and psychological package given by a job match to the employer company" (Ambler and Barrow, 1996). The desire to retain high-quality talent is becoming increasingly important for an organization's long-term success (Rana and Sharma, 2019). As an important component in advancing a healthcare facility, the EB is well- interpreted by prospective and current staff (Maczuga, 2021). Therefore, a critical component of the 'war for talent' is the necessity for health care professionals to distinguish themselves in the job market (Hogan, 2002), which can be done through EB.

EB is a strategy that more organizations are using, despite the lack of theoretical evidence for it (Aldousari et al. 2017). Even though EB methods may be common in firms, there is little study on the topic (Rzemieniak and Wawer, 2021) and it has not been extensively researched in the health sector (Cham et al. 2020). Thus, this study expands on existing research in order to better understand how an employer brand can benefit the healthcare industry by retaining its nursing workforce.

In order to give high-quality treatment in medical facilities, nurses are essential, as such they serve as a focal point in attaining health care priorities due to their global presence. Numerous articles revealed that nursing played a role in the success of all SDGs (Dossey et al. 2019; Wilson et al. 2016; Rosa et al. 2019). However, over the past few decades, nursing staff shortages have spread globally (Marufu et al. 2021). The limited supply of nurses' forces healthcare organizations to assess their organisational culture as well as career development strategies and make sure that it aligns with the organization's attempts to retain nurses (Maczuga, 2021).Thus, the aforementioned comprises the need to focus on their retention, which has been covered in this research article.

This study is also among the few empirical works to emphasize the significance of influencing EB in the context of a high-credibility sector such as healthcare. Furthermore, it also examines the mediating effect of both organizational culture (OC) and career development (CD) on the relationship between EB and nurse retention, keeping the sound base of social identity theory (SIT), which is yet to be investigated. With the help of this research, gaps comprising of lack of awareness and extensive knowledge covering the areas of EB, nurse retention, OC, and CD will be filled. Current research also seeks to acknowledge the gap consisting of existing employees, whereas most of the studies in this context are based on potential recruits (Biswas and Suar, 2016). This research can be mapped by research scholars as well as professionals that can further comprehend EB and plan strategically to support nurses, which may improve organizational sustainability (Villamil and D'Enbeau, 2021).

Theoretical background of the study

Theoretical underpinning. Social identity theory (SIT) adds to the evidence for the relationship between EB and nurse retention. As per SIT, a person's sense of who they are comes from belonging to particular social groups (Tajfel, 1982). The reputation of the group with which we affiliate influences our self-concept (Underwood et al. 2001). Furthermore, it demonstrates how EB improves an organization's appeal and employee retention because current and prospective employees seek membership in associations that enhance their sense of self (Biswas and Suar, 2016). The study of social identity examines how and when people identify as members of a group (Zeugner-Roth et al. 2015). Due to easier application processes and the fact that keeping current employees costs less than replacing them, a stronger EB may result in lower recruitment costs (Biswas and Suar, 2016). To improve comprehension of the EB literature, Tanwar and Kumar (2019) underlined the necessity of comprehending the function of social identity theory (SIT). CD has been shown to strengthen employees' identification and curb their intent to quit under the social identity nexus (Ergun and Tatar, 2018). Employee identification is the process through which people and groups identify themselves in relation to a workplace culture (Balmer, 2008). The extent to which staff identify with the value systems of a given organization has an influence on its performance and market success (Rzemieniak and Wawer, 2021). Existing literature has discussed the topic from both the employee and consumer viewpoints, and it has defended the effectiveness of such a strategy (Brown et al. 2006; Cardador and Pratt, 2006; He and Balmer, 2007). Taking SIT as the theoretical background, it can be contended that EB could have an impact on how employees identify with a business, particularly when there is a feeling of unity and belonging (Ashforth and Mael, 1989) and can potentially influence workers' intentions to leave their employment (O'Neill and Gaither, 2007; De Moura et al. 2009). Therefore, the theory provides a strong foundation for the current investigation, as firms are social entities.

Employer branding. EB is the distinct collection of qualities that enables an employer to differentiate itself from competitors (CIPD 2007). It is also among the latest organization management topics (Rzemieniak and Wawer, 2021) where firms employ it as a tactical tool for a long-term competitive advantage (Butt et al. 2020). As employers have always focused on recruitment and retention of quality staff, it can be argued that EB was present in terms of building a firm's image before the EB term came into existence (Lackovic et al. 2019). Regarding the significance of EB, a poll revealed that Indian companies have begun to understand its impact, with ~72% of respondent organizations ranking it as a top preference (Backhaus, 2016). Researchers have been interested in EB as a strategy for human resources, and the effectiveness of EB has been regularly studied. It has also been clear that EB has a substantial impact on employees' degree of interest (Matongolo et al. 2018; Tanwar, 2016; Tanwar & Prasad, 2016b). According to some, EB not only helps in attracting the best candidates but also helps keep them on board for a longer period (Rana and Sharma, 2019). Wahba and Elmanadil (2015) described it as a technique for inner expression of the distinctive set of qualities to display a firm's identity as an employer for luring and keeping both potential and present workers. EB has been investigated as a method to help companies develop a unique place in the marketplace of talent (Backhaus and Tikoo, 2004). As per Priyadarshi (2011), the competition to stand out as an employer as a result of a talent shortage and different options has made managing EB image more important than ever. According to Aldousari et al. (2017) in the last decade, the idea of an EB has become more prevalent. Since they use it to attract and keep top-tier candidates, human resource managers find it very attractive.

However, Employer Branding has its limitations too. Rampl et al. (2014) demonstrated that decision-making in respect of strong brands was associated with decreased brain activation, as found using functional magnetic resonance imaging (FMRI). This implies that while selecting an organization with high employer branding, people use less information processing which may lead to unsuitable decisions that turn out to be dissatisfactory in future causing attrition. Brooks et al. (2003) discovered that

organizations with a strong reputation provided a larger pool of both positive and negative associations about that company. Studies in this area have also found that people tend to accept lower pay to work at an organization with a strong image (Cable and Turban, 2003; DelVecchio et al. 2007). While this may be beneficial to the organization while recruiting staff, in the long term, it may affect retention negatively if the employees feel that they are not being compensated fairly for their work.

König and London (2008) notes that in the era of heightened global market competitiveness and the rising technology innovation, having a functioning human capital is essential. Thus, firms should constantly evaluate whether branding messages are aligned with the employment experience because this facilitates to fostering optimistic attitudes among staff (Khan et al. 2021).

Retention. As per the SIT, if individuals are not satisfied with their social identity, they may make efforts to leave their existing group (Tajfel, 1982). Therefore, employer branding is expected to affect retention of employees. According to Kossivi et al. (2016), by placing policies and practices in place that caters to the many requirements of employees, one can systematically work to develop and cultivate an environment that encourages workers to stay on the job. This objective may be intentionally pursued, or it may develop over time as a result of numerous external factors impacting the employee. Retaining competent personnel in today's cutthroat environment is a challenge (Oludayo et al. 2018). Kim and Kim (2021) found that hospitals should use retention measures to reduce turnover rates by examining the rate of turnover and risk factors for turnover among newly hired nurses. Therefore, retention refers to the action a company takes to encourage employees to stay in their original units.

Organizational culture. Organizational Culture (OC) is how its life is expressed; hence one may compare OC to the character of the organization. According to Edgar H Schein (1984), "Culture is a pattern of shared basic assumptions that the group learned as it solved its problems of external adaptation and internal integration, that has worked well enough to be considered valid and, therefore, to be taught to new members as the correct way you perceive, think, and feel in relation to those problems". Activities that serve as a representation of OC are encouraged by behavioral norms and values (Bennett et al. 2021). As postulated by the SIT, the employees of any organization are engaged with each other as a group in terms of cooperation, help and innovation. These activities form a part of the organizational culture (Haslam et al. 2014) and not simply enact a job description. According to Divyarajaram (2014), OC plays a crucial role in encouraging employees to follow a code of conduct; supports motivation through acknowledgment; encourages self-satisfaction; and serves as a model for employee behavior. Thokozani and Maseko (2017) perceive that OC is an organisational focus on its internal stakeholders, which develops the fundamental principles that direct employee behavior. Odor (2018) viewed the notion that culture is shared and learned as a crucial element of all definitions of culture. Supervisor support has also been a part of the organization culture that affects employee's productivity Bond (2004) Yang et al. (2016). In the case of healthcare settings, Grube et al. (2010), highlighted that documenting unsafe acts in hospitals is likely to increase in direct proportion to the amount of supervisory support nurses obtain.

Career development. CD is the practice of improving one's employability in order to pursue the career of choice (Adnyani and Dewi, 2019). The goal of CD is to empower employees with additional responsibilities and show them that their efforts are valued. This variable stems from the SIT, which suggests that an individual's evaluation of his/her level of respect within the group, affects the individual's self-esteem (Hogg and Abrams, 2001). Every employee expects their supervisor to inspire them to perform effectively (Afiyati, 2018). CD is a workplace activity that aids individuals in making plans for their future employment with the firm so that both the employer and the employees concerned can reach their full potential (Jumawan, 2018). It is also considered a measure that can be utilized by firms to maintain and raise employee productivity and to get an employee ready for their career path (Cedaryana and Supriyati, 2018). The methods used in career development programs are those that help people achieve their professional goals while also coordinating those goals with the objectives of their organizations (Schultze and Miller, 2004).

Research hypothesis formation for present study

Relationship between employer branding and retention. Studies from the past show that the EB approach is gaining awareness across the globe (Yameen et al. 2021). There is a dearth of studies on the topic of employee retention (Bharadwaj and Yameen, 2021; Tanwar and Prasad, 2016a). Few research, meanwhile, has focused on company branding to explain significant variations in the positive effect of staff retention on employees (Hadi and Ahmed, 2018; Matongolo et al. 2018). As stated by Ahmad and Daud (2016), firms can draw in and keep personnel of particular importance because of an organization's image as a chosen brand. Employee turnover intentions can be decreased when employers give unique job opportunities that are highly valued by EB (Kashyap and Verma, 2018). Thus, it might be argued that an EB strategy could encourage employee attachment on a psychological level, boosting their propensity to stay for a longer amount of time (Raj, 2020).

EB is made up of real and intangible benefits that a company provides to recruit and keep employees (Tanwar and Prasad, 2017). Due to the realization that EB might increase retention, there is a concentrated attempt to improve it (Biswas and Suar, 2016). Studies in the past have suggested that EB is important because of its potential as a viable intervention to tackle the issue of the difficulty of finding and keeping competent workers (Chambers et al. 1998). Backhaus and Tikoo (2004) found that Employee post-entry performance is likely to suffer, and staff turnover will rise, if an employer fails to live up to the employer brand promise. Kucherov and Zavyalova (2012) suggest that organizations with a distinct EB experience decreased turnover. As per Maczuga (2021), there is a critical shortage of medical workforce, which could be explained by a blurry image of the hospital employer brand. Therefore, from the above literature review

we can hypothesize that:

Hypothesis 1 (H1): Employer Branding has a positive impact on retention.

Relationship between employer branding and organizational culture. Khan et al. (2021) claimed that EB involves a group of characteristics, frequently intangible, that highlight an organization's uniqueness, provide job opportunities, and draw people who perform optimally in its culture. According to Raj (2020) support from management has been explored to promote a brand-driven culture where staff feel emotionally connected to an organization's brand. Additional researchers indicated that organizational attributes long associated with organizational attractiveness, such as positive relationships, growth opportunities, corporate image, and recognition, were the driving forces behind the EB (Bellou et al. 2015). Through the processes of self-

selection and similarity attraction, EB messages also have an impact on OC (Byrne and Neuman, 1992). Kucherov and Zavyalova (2012) argued that internal EB could enhance corporate culture. Thus, we can hypothesize that:

Hypothesis 2 (H2): Employer branding has a positive impact on Organisational culture.

Relationship between employer branding and career development. There is little research on the connection between EB and CD (Ibrahim et al. 2018). Gupta et al. (2014) stressed that EB aids in CD, which may result in excellent hires. A strong workforce contributes to the organization's improved condition. In order to achieve organizational development and employee overall development (including CD), all organizations need to communicate positively about their organizational policies on social platforms. EB has been linked to professional advancement. This also relates to training, development, and career growth aspects (Yaqub and Khan, 2011). The scope of the instruments created by Srivastava and Bhatnagar (2010) identified one of the most crucial aspects through factor analysis of EB and career advancement dimensions. Considering this, it is worthwhile to test a hypothesis in the context of nurses is as follows:

Hypothesis 3 (H3): Employer branding has a positive impact on Career development.

Relationship between organizational culture and retention. Tsarenko et al. (2018) laid emphasis on the significance of engaging in encouraging behaviors that can favorably increase employees' inclinations to remain in a firm. Likewise, Arasanmi and Krishna (2019) stressed that firms with EB strategies that include a positive work environment are successful in retaining their outstanding workers over the long term. Employees are more inclined to stay with an organization if they feel that their new employer shares their values (Hoffman and Woehr, 2006). OC affects the environment at work, which affects nurses' decisions on whether to stay or not in their jobs (Hutchinson et al. 2008). Marufu et al. (2021) present an up-to-date overview of the research on factors that affect nurse retention in hospital settings, including OC. According to Draper et al. (2008) the ability to attract and retain employees depends on supportive OC. Based on this, we hypothesize that:

Hypothesis 4 (H4): Organisational culture has a positive impact on retention.

Relationship between career development and retention. According to Wane (2016), all organizations place a high priority on employee retention; therefore, putting development strategies in place will improve the organization's profitability and further retention. Takase et al. (2016) indicate that nursing turnover was negatively correlated with the presence of growth possibilities. One strategy for attracting and keeping nursing talent is to produce new understanding gained through innovation and research, which improves professional growth opportunities (Marufu et al. 2021). This is supported by research demonstrating that wanting to build a rewarding career was the next most frequently cited motivation for nurses sought to quit the field (Philippou, 2015). Opportunities for advancement have been shown to significantly influence nurse retention. This underlines how crucial it is to prioritize nurses' professional development as a strategy for their retention (Gregorka et al. 2020). Hence, we hypothesize that:

Hypothesis 5 (H5): Career development has a positive impact on retention.

Organizational culture and career development as mediators between employer branding & retention. Mediational models are at the core of social science and business investigation, often known as 'vital to theory development,' 'important to the scientific status of the field' and an 'indispensable tool' to get a deeper scientific knowledge of the processes affecting exogenous and endogenous variables' interaction (Pieters, 2017; Rucker et al. 2011). Consequently, in modern literature and research endeavours, the mediation model has grown to be "almost mandatory" and "ubiquitous" (Bullock et al. 2010). Because earlier studies have shown that EB and retention are related (Bendaraviciene, 2015; Matongolo et al. 2018), researchers have determined that the linkages between EB and employee retention need to be experimentally validated (Yameen et al. 2021), providing additional cultural and organizational contexts to the study (Matongolo et al. 2018). Previous studies have examined the connection between EB and employee-related results, but they have not addressed this issue. Due to the paucity of theory-based empirical research, this study seeks to provide fresh perspectives on how EB may increase retention through OC and CD. Therefore, in keeping with the literary trend, this study argues that OC and CD are likely to influence the relationship between EB and retention (refer to research model in Fig. 1). So, we hypothesize that:

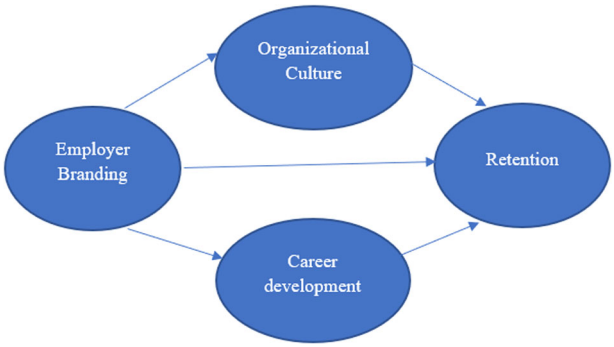

Fig. 1 The Relationship among the variables. Representation of the four variables (employer branding, organizational culture, career development and retention).

Hypothesis 6 (H6): Organisational culture mediates the relationship between Employer branding and retention.

Hypothesis 7 (H7): Career development mediates the relationship between Employer branding and retention.

The figure below depicts the research framework of the study that examines the association between Employer Branding and Retention as well as the mediating role of Organizational Culture and Career Development (refer Fig. 1).

Research design and method. This study followed cross sectional descriptive design.

Sample and data collection. Purposive sampling was employed as the sampling technique for this study. Primary data was acquired from a sample of nurses of different departments and designations from the National Accredited Board of Hospitals and Healthcare Providers (NABH) private healthcare facilities in the Northern Indian region of Punjab, Himachal Pradesh, and Haryana. The reason for choosing NABH hospitals for the study was the credibility of these hospitals as the process of accreditation examines a hospital's performance in comparison to set standards of quality (Brubakk et al. 2015). On the premise that the certification procedure will enhance clinical governance and care quality, this quality-improvement approach has been developed (Flodgren et al. 2011). The NABH official website provided the list of hospitals for the survey. Majority of the hospitals had four nursing departments, namely, Ward nurse, Operation theatre nurse, Critical care unit nurse and Education.

From each of the departments, a random sample of nurses was drawn through a lottery method in order to have equal representation from all types of departments.

An ethical approval and authority letter was obtained from the ethical committee of the institution for data collection. We framed the structured questionnaire using a five-point Likert scale response format (where 1 is used for strongly disagreeing and 5 for strongly agreeing) along with the addition of a consent declaration regarding the use of research for academic purposes in the questionnaire. The items in the questionnaire were adapted from previous literature largely based on semantics. The Employer Branding items were adapted from Berry and Martin (2019), and Shukla and Deb (2017) depicting role of brand, firm image, and brand association. The items for Career Development were adapted from Behera et al. (2019) comprising of professional growth and those for Organizational culture were adapted from Parakh (2019) portraying inter- personal relations within the organization. A few items which were relevant in the context of nursing and hospital branding were added to these by the researcher. Retention items were adapted from Alam and Mohammad (2010) and Zopiatis et al. (2014) to study the intent to quit the hospital. The items in the questionnaire are listed in Table 2.

Because the role of EB is more ubiquitous in larger hospitals, all the hospitals evaluated for the study have 100 or more beds, making the study even more successful. The Yamane formula (N/1 + N e2) was used to compute sample size when the total population (N) was about 3000, and the margin of error (e) was 0.05. A total of 628 registered nurses from 51 NABH hospitals volunteered to participate in the study out of a total of 68 hospitals found on the NABH website. The data collection process began during the COVID pandemic period of July 2021 and ended in January 2022. Hospitals that were unable to engage in the survey cited nurse responsibilities to their jobs and a breach of confidentiality as reasons for their non-participation, resulting in a response rate of 75%.

Data analysis. As shown in Table 1, the descriptive statistics were obtained with the help of the Statistical Package of Social Sciences.

A Partial Least Square Structured equation modelling (PLS-SEM) technique was used for assessment of measurement and structural models (Ringle et al. 2015). PLS-SEM is a well-established approach in the disciplines of marketing and business research. Its significantly high power, predictability, and adaptivity sets it apart from other technique like CB-SEM (Sarstedt et al. 2022). It is beneficial as it simultaneously estimates construct-to-construct relationships (structural model) and indicator-to-construct relationships (measurement model) (Chin et al. 2003).

Results

Measurement model assessment. Measurement Model was examined for reliability and convergent as well as discriminant validity. The values of all internal consistency reliability measures i.e., Cronbach's Alpha, Rho_A as well as Composite Reliability were found to be above 0.7 establishing the reliability for all the constructs in the model. Two items each from OC and CD had to be dropped because of low factor loadings resulting in lower Average Variance Extracted (AVE). After dropping these items, all the AVE values were found to be above 0.5 and all factor loadings of individual items of the reflective constructs retained were found to be above 0.6 (Chin, 1998). One item of the EB construct which was cross-loading with the retention was also dropped from the final analysis.

Table 1 Descriptive statistics.

		Frequency	%	Mean	SD
Gender	Female	421	67		
	Male	207	33		
Age group	21–31	452	72		
	32–42	166	26.4		
	42 above	10	1.6		
Marital status	Single	430	68.5		
	Married	198	31.5		
	Graduation/ Diploma	503	80.1		
Qualification	Post-Graduation	124	19.7		
	Doctorate	1	0.2		
	Staff nurse	461	73.4		
Designation	Supervisor/ Incharge	148	23.6		
	Head Nurse	19	3		
	Less than 3 years	350	55.7		
	3–6 years	212	33.8		
Total Experience	6–9 years	53	8.4		
	9 above	13	2.1		
	<3 Lac	408	65		
Income(pa)	3–5 Lac	199	31.7		
	Above 5 Lac	21	3.3		
Employer Branding				2.43	0.654
Organizational culture				1.98	0.897
Career development				1.97	0.896
Retention				2.58	0.764

Table 2 presents the results of Reliability and Convergent Validity Analysis, and individual item loadings are presented in Fig. 2. Table 3 presents the results of Discriminant Validity Analysis. It can be seen that discriminant validity of the constructs is established with all HTMT values up to 0.90 (Henseler et al. 2015).

Structural model assessment. Figure 2. depicts the PLS-SEM Model run for the study. Structural Model Path Coefficients are given in Table 4 and Table 5 exhibits the Quality Criteria for the Model's explanatory power. Bootstrapping procedure was run with 5000 subsamples to determine the importance of the path coefficients. Model Fit Assessment has been based on the Standardized Root Mean Square Residual (SRMR) value which at 0.064, is below the threshold value of 0.08 as suggested by (Hair et al. 2021) exhibiting a good model fit.

All the path coefficients were found to be significant establishing the evidence for all the hypothesized relationships in the model. The results show a significant positive effect of EB on retention ($\beta = 0.510$, t value = 9.68, p value = 0.000) supporting H1. H2 evaluates whether EB has significant impact on OC. The results revealed that EB has significant impact on OC ($\beta = 0.706$, t value = 28.521, p value = 0.000). Hence H2 is supported. H3 evaluates whether EB has significant impact on CD. The results revealed that EB has significant impact on CD ($\beta = 0.669$, t value = 27.059, p value = 0.000). Hence H3 is supported. H4 evaluates whether OC has significant impact on retention. The results revealed that OC has significant impact on retention ($\beta = 0.$, t value = ,p value = 0.000). Hence H4 is supported. H5 evaluates whether CD has significant impact on

Table 2 Reliability and convergent validity.

	Cronbach's Alpha	rho_A	Composite reliability	Average variance extracted (AVE)
Employer Branding	0.796	0.797	0.860	0.551
EB1 I am proud to be associated with this brand				
EB2 I can manage both personal & professional life with this hospital				
EB3 I feel more confident as a result of working here (deleted)				
EB4 I am satisfied with job security in this hospital				
EB5 I am satisfied with the facilities (Food, water, sanitation) provided				
EB6 I am rewarded fairly with respect to industry standard				
EB7 Brand played an important role in joining this hospital				
EB8 Hospital implements COVID-19 control measures				
EB9 I am satisfied with the increment & promotion				
Career Development	0.875	0.876	0.902	0.534
CD1 I am satisfied with the opportunity for professional growth. (deleted)				
CD2 I am updated with the latest skills from time to time through organization training.				
CD3 I continuously strive to achieve my work goals.				
CD4 I am satisfied with the job-related training hospital offers (deleted)				
CD5 I am satisfied with the steps taken by the hospital for our nursing education				
CD6 Supervisor mostly provides feedback in order to improve				
CD7 Hospital offers task variety and opportunities to learn				
Organizational Culture	0.758	0.758	0.838	0.508
C1 I can always talk with someone at work if I have work related problem				
C2 My Seniors treat me with respect (deleted)				
C3 Hospital provides flexible work arrangements				
C4 Hospital adapts change quickly				
C5 My supervisor recognizes and rewards my effort				
C6 My relationship with colleagues is friendly as well as professional				
Retention	0.841	0.843	0.887	0.611
R1 I see my future in this hospital				
R2 I do not intend to leave the hospital in near future				
R3 Presently, I am not searching for job in another hospital				
R4 It is unlikely that I will look for a job in near future				
R5 I will continue to work in this hospital despite of being offered by other hospital				

retention. The results revealed that CD has significant impact on retention ($\beta = 0.176$, t value $= 3.56$, p value $= 0.000$). Hence H5 is supported.

The analysis for evaluating the mediation effect of CD and OC on Retention was conducted following the procedure given by Zhao et al. (2010). The analysis confirms the mediating effect of OC and CD on the association between EB and retention. Hence H6 and H7 is supported. The direct effect of EB on Retention was found to be significant and both the specific indirect effects in the model are also found to be significant as can be seen from Table 4. This implies that OC as well as CD partially mediates the relation between EB and Retention in a complementary mediation as both the total effects are positive. Total indirect effects from EB to Retention are positive and significant exhibiting that OC and CD also have a significant joint effect in mediating the relationship between EB and retention.

The R^2 and Adjusted R^2 values of the target dependent variable of Retention are above 0.6 which shows strong explanatory power of the model (Table 5). In terms of individual variable effect size, EB has medium-large effect size while CD and OC have small effect size on the explanation of variance in Retention variable as per the threshold values of 0.02, 0.15 and 0.35 for small, medium, and large effects respectively (Cohen, 1988).

PLS model used for the study, was also assessed for predictive accuracy using the Q^2 value based on the blindfolding procedure (Sarstedt et al. 2014). Table 6 shows the results of the Blindfolding procedure run in Smart PLS for the higher order model of study. Q^2 values higher than 0, 0.25 and 0.50 depict small, medium, and large predictive relevance of the PLS-path model (Hair et al. 2019). All Q^2 values were found to be above 0.25 for the model depicting medium predictive power of the PLS model of the study.

Discussion and conclusion

As a human resource approach, EB in health facilities should be viewed as a well-planned strategic approach that seeks to enhance workplace conditions for existing employees (Maczuga, 2021). A strong company brand is vital for retaining top talent and gives organizations a competitive advantage (Graham and Cascio, 2018). Employee brand loyalty results from positive connections with the company's brand, which induces employees to join and stay with the company (Mwanzi et al. 2017).

This study uncovered the role of EB in the retention of nurses in response to the research's requirement for evidence of the relationship between branding and retention. Our results demonstrate

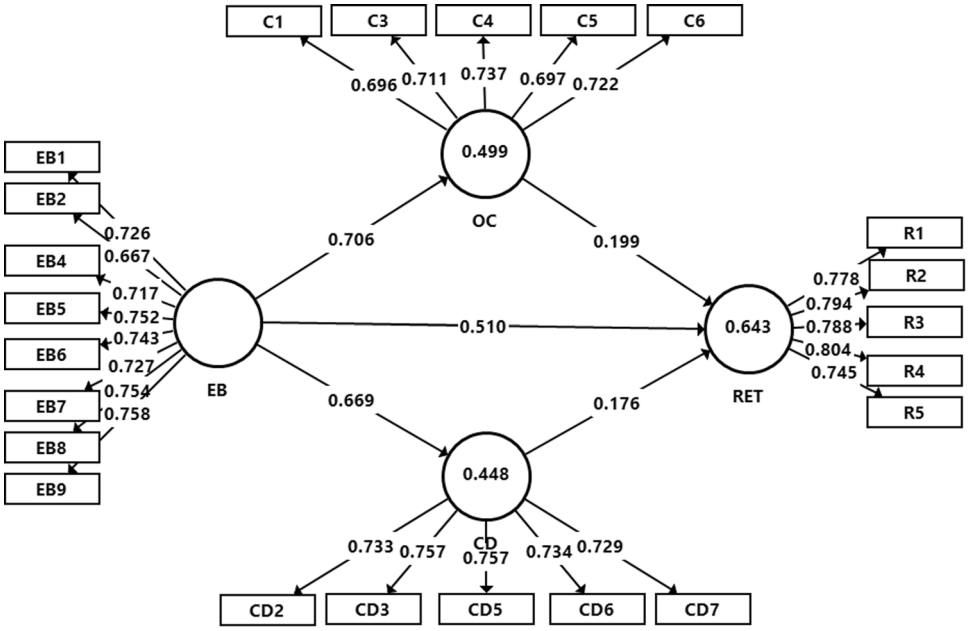

Fig. 2 PLS Model. EB = Employer branding, OC = Organisational culture, RET = Retention, CD = Career development.

Table 3 Discriminant Validity - HTMT Ratio.

	EB	CD	OC	RET
EB				
CD	0.799			
OC	0.900	0.864		
RET	0.800	0.892	0.851	

EB = Employer branding, OC = Organisational culture, RET = Retention, CD = Career development.

that the impact of EB on nurse retention becomes amplified with OC and CD, stating that employees would like to continue in an organization by reasserting the concept given by social identity theory. The EB variable under investigation indeed showed direct and indirect relationships that unquestionably have a crucial role in OC, CD, and nurse retention. Due to the theoretical underpinnings of the current study, which encourages the idea of social identity among employers and employees, companies that provide various aspects of EB, OC, as well as CD tend to encourage their employees to become brand/social identity and live brand, further enhancing their desire to stay with the organization for a longer duration.

The present study enabled us to conclude that EB has a positive relationship with retention along with the complementary mediation of OC and CD. EB assists in managing future and current employees' views as a targeted approach (Sullivan, 2004), where workers are more likely to interact with firms with strong EB (Aldousari et al., 2017), which paves the way toward their retention. When employees believe a company's actions benefit both the community and their staff members, they tend to identify more with it and are willing to go above and beyond (Biswas and Suar, 2016; Tanwar and Prasad, 2016b). The best talents are selective about their employers and base their decision on the value they receive from the employer (Maczuga, 2021). Employee branding aids in the retention of talented employees whose skills add value to the organization (Basha et al. 2020). Thus, EB introduction is not a choice anymore but a necessity (Reis et al. 2021).

Implications. This study offers both theoretical and practical implications, as it aims to investigate how the employer branding of hospitals affects nurses' willingness to stay in the organization. There is a significant amount of study on EB, with a special emphasis on external stakeholders. Making contribution toward the existing literature that explains EB more as a "recruitment strategy" meant to draw in a talented applicant pool (Backhaus and Tikoo, 2004; Dabirian et al. 2019; Dabirian et al. 2019), this article focuses on the critical aspect of retention as a good recruitment strategy may prove to be non-beneficial if the talent acquired is failed to be retained. Employing the tenets of Social Identity Theory (SIT), this paper also brings out the role of other significant variables that play a role in the retention of nurses. Thus, the role of Organizational Culture and Career Development are examined and found to be significant mediators of the relationship between employer branding and retention of nurses. This provides insights into the different dimensions that affect the retention of nurses in an integrated framework. Contributing to the literature, this paper has focussed on the healthcare sector, where there is a dearth of studies in this area. This study is one of the earliest investigations to assess the effect of EB on the organisational outcome in terms of talent retention in the respective sector.

In practical aspects, implementing our research can act as a platform for human resource professionals, as employers with effective EB initiatives are acutely aware of the benefits of luring, inspiring, and motivating both current and prospective staff (Aldousari et al., 2017). EB is one of the many reputational elements contributing to sustainable competitive advantage (Backhaus, 2016). Thus, this study benefits governments, human resource experts, organizations, and the healthcare industry as a whole since it paves the way for formulating strategies and policies that will increase retention and organizational efficacy.

Limitations and future research directions. Even though this paper has attempted to address the issue of how EB affects retention, it has certain limitations. First, additional research should focus on the underlying differences between various organizational forms according to their industry sector, level of competition, location, country structure, and overall economic situation. Second, the study was focused on only nursing staff and as compared to males, female participation was in majority in the

Table 4 Path coefficients of structural model.

DIRECT EFFECTS			
Path	**Coefficient**	**T Statistics**	***P* Values**
Career Development -> Retention	0.176[a]	3.569	0.0001
Employer Branding -> Career Development	0.669[a]	27.059	0.0001
Employer Branding -> Organizational Culture	0.706[a]	28.521	0.0001
Employer Branding -> Retention	0.510[a]	9.687	0.0001
Organizational Culture -> Retention	0.199[a]	4.090	0.0001
INDIRECT EFFECTS			
Path	Coefficient	T Statistics	*P* Values
Employer Branding -> Organizational Culture -> Retention	0.140[a]	4.054	0.0001
Employer Branding -> Career Development -> Retention	0.118[a]	3.560	0.0001
Employer Branding -> Retention	0.258[a]	7.055	0.0001

[a]Shows significant at 1%

Table 5 Model explanatory power.

Explanatory Power: R Square	R Square	R Square Adjusted
Retention	0.643	0.641
Organizational Culture	0.499	0.498
Career Development	0.448	0.447
Effect Size		F Square
Employer Branding -> Retention	0.321	
Organizational Culture -> Retention	0.045	
Career Development -> Retention	0.039	

Table 6 Blindfolding – Q^2.

Construct	SSO	SSE	Q^2 (=1-SSE/SSO)
Retention	3140.000	1924.308	0.387
Organizational Culture	3140.000	2357.939	0.249
Career Development	3140.000	2377.330	0.243

present study sample. Thus, future studies can take into consideration other departments as well as male nurse perspective. Third, further research can concentrate on a more in-depth examination of the EB components and the relationships based on the conceptual model established in this study by including more variables. Fourth, for data collection only NABH private hospitals with 100 or more beds were considered for this study leaving the scope of engaging with public hospitals.

Based on the above information, additional study is necessary to explore the opposing results. Although EB has been in existence for more than 20 years, there is still much to learn about its goals and methods for addressing many challenges, such as staff recruitment and retention.

Data availability

The datasets generated during and/or analyzed during the current study are not publicly available due confidentiality agreement with participants, but are available from the corresponding author on reasonable request.

Received: 21 October 2022; Accepted: 24 May 2023;
Published online: 20 June 2023

References

Adnyani NLPR, Dewi AASK (2019) The Influence of Work Experience, Job Performance and Training on Employee Career Development. E-J Manag 8(07):4073–4101
Afiyati EM (2018) Pengaruh Pengembangan Karir, Motivasi Kerja, Dan Disiplin Kerja Terhadap Kinerja Karyawan Bank Syariah Mandiri Cabang Surakarta. J Mater Proc Technol 1(1):1–142
Ahmad NA, Daud S (2016) Engaging people with employer branding. Procedia Econ Finance 35:690–698
Alam MM, Mohammad JF (2010) Level of job satisfaction and intent to leave among Malaysian nurses. Business Intelligence J 3(1):123–137
Aldousari AA, Robertson A, Yajid MSA, Ahmed ZU (2017) Impact of employer branding on organization's performance. J Transnatl Manag 22(3):153–170
Ambler T, Barrow S (1996) The employer brand. J Brand Manag 4:185–206
Arasanmi CN, Krishna A (2019) Employer branding: perceived organisational support and employee retention–the mediating role of organisational commitment. Industr Commer Training 51(3):174–183
Ashforth BE, Mael F (1989) Social identity theory and the organization. Acad Manag Rev 14(1):20–39
Backhaus K, Tikoo S (2004) Conceptualizing and researching employer branding. Career Dev Int 9(5):501–517
Backhaus K (2016) Employer branding revisited. Organization Manag J 13(4):193–201
Balmer JM (2008) Identity based views of the corporation: Insights from corporate identity, organisational identity, social identity, visual identity, corporate brand identity and corporate image. Eur J Market 42(9/10):879–906
Basha HA, Rajitha MN, Afreen MR (2020) Employer Branding: A New Facet of Health Care Sector. Int J Eng Res Technol 9:11
Behera MR, Prutipinyo C, Sirichotiratana N, Viwatwongkasem C (2019) Retention of medical doctors and nurses in rural areas of Odisha state, India–a policy analysis. Int J Workplace Health Manag 12(4):178–196
Bellou V, Chaniotakis I, Kehagias I, Rigopoulou I (2015) Employer brand of choice: An employee perspective. J Business Econ Manag 16(6):1201–1215
Bendaraviciene R (2015) Measurement of organizational attractiveness for employer branding in higher education. In 8th Annual Conference of the EuroMed Academy of Business, EuroMed Press, Bradford, pp 263–284
Bennett E, Ojha S, Vardhan CV (2021) Indian Healthcare and Organisational Culture: A review. Int J Eng Res Technol 10:02
Berry A, Martin J (2019) An exploratory analysis of employer branding in healthcare. Int J Pharma Healthcare Market 13(1):84–100
Bharadwaj S, Yameen M (2021) Analyzing the mediating effect of organizational identification on the relationship between CSR employer branding and employee retention. Manag Res Rev 44(5):718–737
Biswas MK, Suar D (2016) Antecedents and consequences of employer branding. J Business Ethics 136:57–72
Bond S (2004) Organisational culture and work-life conflict in the UK. Int J Sociol Soc Policy 24(12):1–24
Brooks ME, Highhouse S, Russell SS, Mohr DC (2003) Familiarity, ambivalence, and firm reputation: Is corporate fame a double-edged sword? J Appl Psychol 88(5):904
Brown TJ, Dacin PA, Pratt MG, Whetten DA (2006) Identity, intended image, construed image, and reputation: An interdisciplinary framework and suggested terminology. J Acad Market Sci 34(2):99–106
Brubakk K, Vist GE, Bukholm G, Barach P, Tjomsland O (2015) A systematic review of hospital accreditation: the challenges of measuring complex intervention effects. BMC Health Serv Res 15:1–10

Bullock JG, Green DP, Ha SE (2010) Yes, but what is the mechanism? (do not expect an easy answer). J Personal Social Psychol 98(4):550
Butt A, Lodhi RN, Shahzad MK (2020) Staff retention: a factor of sustainable competitive advantage in the higher education sector of Pakistan. Studies Higher Educ 45(8):1584–1604
Byrne D, Neuman JH (1992) The implications of attraction research for organizational issues. Chapter 2, In: Kelley K (ed) Advances in psychology. North-Holland, Vol 82, pp 29–70
Cable DM, Turban DB (2003) The value of organizational reputation in the recruitment context: A brand-equity perspective. J Appl Soc Psychol 33(11):2244–2266
Cardador MT, Pratt MG (2006) Identification management and its bases: Bridging management and marketing perspectives through a focus on affiliation dimensions. J Acad Market Sci 34(2):174–184
Cedaryana MRL, Supriyati Y (2018) Influence of Work Discipline. Career Development and Job Satisfaction on Employee Performance Directorate General Research and Development of Ministry Research, Technology and Higher Education. Int J Sci Res Manag 6(02):87–96
Cham TH, Cheng BL, Low MP, Cheok JBC (2020) Brand Image as the competitive edge for Hospitals in Medical Tourism. Eur Bus Rev 33:1
Chambers EG, Foulon M, Handfield-Jones H, Hankin SM, Michaels III EG (1998) The war for talent. McKinsey Quart 3:44
Chin WW (1998) The partial least squares approach to structural equation modelling. Modern Methods Business Res 295(2):295–336
Chin WW, Marcolin BL, Newsted PR (2003) A partial least squares latent variable modelling approach for measuring interaction effects: Results from a Monte Carlo simulation study and an electronic-mail emotion/adoption study. Inform Syst Res 14(2):189–217
CIPD (2007). Employer branding. The latest fad or the future for HR? Res insight. CIPD. http://www.cipd.co.uk/NR/rdonlyres/56C8377F-256B-4556-8650-8408B0E07576/0/empbrandlatfad.pdf
Cohen J (1988) Statistical Power Analysis for the Behavioural Sciences. Lawrene Erlbaum Associates, Hillsdale, NJ, p 20–26
Dabirian A, Berthon P, Kietzmann J (2019) Enticing the IT crowd: employer branding in the information economy. J Bus Ind Mark 34(7):1403–1409. https://doi.org/10.1108/JBIM-11-2018-0333
Dabirian A, Paschen J, Kietzmann J (2019) Employer branding: Understanding employer attractiveness of IT companies. IT Profess 21(1):82–89
De Moura GR, Abrams D, Retter C, Gunnarsdottir S, Ando K (2009) Identification as an organizational anchor: How identification and job satisfaction combine to predict turnover intention. Eur J Soc Psychol 39(4):540–557
DelVecchio D, Jarvis CB, Klink RR, Dineen BR (2007) Leveraging brand equity to attract human capital. Marketing Lett 18:149–164
Divyarajaram (2014). Functions of organisational culture. Author Stream. www.authorstream.com/presentation/divyarajaram1390912-functions-of-organisational-culture/
Dossey BM, Rosa WE, Beck DM (2019) Nursing and the sustainable development goals: From Nightingale to now. AJN Ame J Nursing 119(5):44–49
Draper DA, Felland LE, Liebhaber A, Melichar L (2008) The role of nurses in hospital quality improvement. Research Brief 3:1–8
Ergun HS, Tatar B (2018) Employer branding and employee attitudes: mediating role of person-organization fit. Res J Business Manag 5(2):110–120
Flodgren G, Pomey MP, Taber SA, Eccles MP (2011) Effectiveness of external inspection of compliance with standards in improving healthcare organisation behaviour, healthcare professional behaviour or patient outcomes. Cochrane Database Syst. Rev (11):CD008992. https://doi.org/10.1002/14651858.CD008992.pub2
Graham BZ, Cascio WF (2018) The employer-branding journey: Its relationship with cross-cultural branding, brand reputation, and brand repair. Manag Res: J Iberoamerican Acad Manag 16(4):363–379
Gregorka L, Silva S, Silva C (2020) Employer branding practices amongst the most attractive employers of IT and engineering sector. Int J Human Capital Inform Technol Profess 11(1):1–16
Grube JA, Piliavin JA, Turner JW (2010) The courage of one's conviction: when do nurse practitioners report unsafe practices? Health Commun 25(2):155–164
Gupta P, Patti R, Marwah S (2014) Employer branding: A descriptive study. Int J Econ Manag Strategy 4(1):1–10
Hadi NU, Ahmed S (2018) Role of employer branding dimensions on employee retention: Evidence from educational sector. Administrative Sci 8(3):44
Hair Jr JF, Hult GTM, Ringle CM, & Sarstedt M (2021) A primer on partial least squares structural equation modelling (PLS-SEM). Sage publications, United States of America
Hair JF, Risher JJ, Sarstedt M, Ringle CM (2019) When to use and how to report the results of PLS-SEM. Eur Business Rev 31(1):2–24
Haslam SA, Van Knippenberg D, Platow MJ, Ellemers N (2014) Social identity at work: Developing theory for organizational practice. Psychology Press, New york, USA
He H, Balmer JMT(2007) Identity studies: multiple perspectives and implications for corporate-level marketing. Eur J Mark 41(7/8):765–785. https://doi.org/10.1108/03090560710752393
Henseler J, Ringle CM, Sarstedt M (2015) A new criterion for assessing discriminant validity in variance-based structural equation modelling. J Acad Marketing Sci 43:115–135
Hoffman BJ, Woehr DJ (2006) A quantitative review of the relationship between person–organization fit and behavioural outcomes. J Vocat Behav 68(3):389–399
Hogan M (2002) Employer branding offers benefit in 'war for talent' human capital. Australian Banking and Finance, 18
Hogg MA, Abrams D (2001) Intergroup Relations: Key Readings, Essential Readings. Psychology Press, Philadelphia, Pennsylvania
Hutchinson M, Jackson D, Wilkes L, Vickers MH (2008) A new model of bullying in the nursing workplace: Organizational characteristics as critical antecedents. Adv Nursing Sci 31(2):E60–E71
Ibrahim NS, Hashim J, Rahman RA (2018) The impact of employer branding and career growth on talent retention: the mediating role of recruitment practices in the Malaysian public sector. Int JAcad Res Business Social Sci 8(6):1034–1039
Jumawan DTMM (2018) Effects of Training and Career Development on Employee Performance of Cooperative Companies. J Riset Manajemen dan Bisnis (JRMB) Fakultas Ekonomi UNIAT 3(3):343–352
Kashyap V, Verma N (2018) Linking dimensions of employer branding and turnover intentions. Int J Organ Anal 26(2):282–295. https://doi.org/10.1108/IJOA-03-2017-1134
Khan NA, Bharadwaj S, Khatoon A, Jamal MT (2021) Assessing the nexus between employer branding and employee retention: moderating role of organizational identification. Manag Labour Studies 46(4):379–398
Kim Y, Kim HY (2021) Retention rates and the associated risk factors of turnover among newly hired nurses at South Korean hospitals: A retrospective cohort study. Int J Environ Res Public Health 18(19):10013
König C, London C (2008) Management crunch. Brand Strategy 46:46–47
Kossivi B, Xu M, Kalgora B (2016) Study on determining factors of employee retention. Open J Soc Sci 4(05):261
Kucherov D, Zavyalova E (2012) HRD practices and talent management in the companies with the employer brand. Eur J Training Dev 36(1):86–104
Lackovic I, Kajinic K, Spajic M (2019) The Marketing Aspects of Employer Branding. Interdiscip Manag Res 15:745–758
Maczuga N (2021) Creating an attractive workplace for current and potential hospital employees. Prob Perspect Manag 19(3):56
Marufu TC, Collins A, Vargas L, Gillespie L, Almghairbi D (2021) Factors influencing retention among hospital nurses: systematic review. Br J Nurs 30(5):302–308
Matongolo A, Kasekende F, Mafabi S (2018) Employer branding and talent retention: perceptions of employees in higher education institutions in Uganda. Indust Comm Training 50(5):217–233
Mwanzi J, Wamitu SN, Kiama M (2017) Influence of talent management on organizational growth. IOSR J Business Manag 19:8
Odor HO (2018) Organisational culture and dynamics. Global J Manag Business Res 18(A1):23–29
Oludayo OA, Akanbi CO, Obot BM, Popoola SI, Atayero AA (2018) Influence of talent retention strategy on employees′ attitude to work: Analysis of survey data. Data Brief 20:698–705
O'Neill JL, Gaither CA (2007) Investigating the relationship between the practice of pharmaceutical care, construed external image, organizational identification, and job turnover intention of community pharmacists. Res Social Administ Pharm 3(4):438–463
Parakh D (2019) Factors Affecting Nurse Attrition in a Super Specialty Hospital: A Case Study. RFP J Hosp Administration 3(2):73–77
Philippou J (2015) Employers' and employees' views on responsibilities for career management in nursing: A cross-sectional survey. J Adv Nursing 71(1):78–89
Pieters R (2017) Mediation analysis: Inferring causal processes in marketing from experiments. Adv Methods Modelling Markets, 235–263
Priyadarshi P (2011) Employer brand image as predictor of employee satisfaction, affective commitment & turnover. Indian J Industrial Relat 46(3):510–522
Raj AB (2020) Employee well-being through internal branding: An integrated approach for achieving employee-based brand outcomes. Glob Business Rev. 21(4):1065–1086
Raj AB (2020) Impact of employee value proposition on employees' intention to stay: moderating role of psychological contract and social identity. South Asian J Business Studies 10(2):203–226
Rampl LV, Kenning P, Opitz C, Welpe IM et al. (2014) The role of emotions in decision making on employer brands: Insights from functional magnetic resonance imaging (fMRI). Mark Lett 27:361–374. https://doi.org/10.1007/s11002-014-9335-9
Rana S, & Sharma R (2019) An overview of employer branding with special reference to Indian organizations. Brand Culture Identity: Concepts, Methodologies, Tools, Appl 1–13
Reis I, Sousa MJ, Dionísio A (2021) Employer branding as a talent management tool: A systematic literature revision. Sustainability 13(19):10698

Ringle CM, Wende S, Becker JM (2015) SmartPLS 3. Boenningstedt: SmartPLS GmbH, 584 http://www.smartpls.com
Rosa WE, Upvall MJ, Beck DM, Dossey BM (2019) Nursing and sustainable development: Furthering the global agenda in uncertain times. Online J Issues Nurs 24:2
Rucker DD, Preacher KJ, Tormala ZL, Petty RE (2011) Mediation analysis in social psychology: Current practices and new recommendations. Soc Personal Psychol Compass 5(6):359–371
Rzemieniak M, Wawer M (2021) Employer branding in the context of the company's sustainable development strategy from the perspective of gender diversity of generation Z. Sustainability 13(2):828
Sarstedt M, Hair JF, Ringle CM (2022) "PLS-SEM: indeed, a silver bullet"-retrospective observations and recent advances. J Market Theory Pract 19:1–15
Sarstedt M, Ringle CM, Henseler J, Hair JF (2014) On the emancipation of PLS-SEM: A commentary on Rigdon (2012). Long Range Planning 47(3):154–160
Schein EH (1984) Culture as an environmental context for careers. J Organizational Behav 5(1):71–81
Schultze G, Miller C (2004) The search for meaning and career development. Career Dev Int 9(2):142–152
Shukla K, Deb R (2017) A qualitative and quantitative study of the reasons of attrition in an Indian hospital. CHRISMED J Health Res 4(1):6
Singh M, Rokade V (2014) Employer branding: a strategic dimension for employee retention. J Marketing Consumer Res 5:1–6
Srivastava P, Bhatnagar J (2010) Employer brand for talent acquisition: An exploration towards its measurement. Vision 14(1–2):25–34
Sullivan J (2004) Eight elements of a successful employment brand. ER Daily 23(2):501–517
Tajfel H (1982) Social psychology of intergroup relations. Ann Rev Psychol 33(1):1–39
Takase M, Teraoka S, Yabase K (2016) Retaining the nursing workforce: Factors contributing to the reduction of nurses' turnover intention in Japan. J Nursing Manag 24(1):21–29
Tanwar K (2016) The effect of employer brand dimensions on organisational commitment: Evidence from Indian IT industry. Asia-Pacific J Manag Res Innov 12(3-4):282–290
Tanwar K, Kumar A (2019) Employer brand, person-organisation fit and employer of choice: Investigating the moderating effect of social media. Personnel Rev 48(3):799–823
Tanwar K, Prasad A (2016a) Exploring the relationship between employer branding and employee retention. Glob Business Rev 17(3_suppl):186S–206S
Tanwar K, Prasad A (2016b) The effect of employer brand dimensions on job satisfaction: gender as a moderator. Management Decision 54(4):854–886. https://doi.org/10.1108/MD-08-2015-0343
Tanwar K, Prasad A (2017) Employer brand scale development and validation: a second-order factor approach Personnel Review 46(2):389–409. https://doi.org/10.1108/PR-03-2015-0065
Thokozani SBM, Maseko B (2017) Strong vs. weak organizational culture: Assessing the impact on employee motivation. Arabian J Business Manag Rev 7(1):2–5
Tsarenko Y, Leo C, Herman HM (2018) When and why do social resources influence employee advocacy? The role of personal investment and perceived recognition. J Business Res 82:260–268
Underwood R, Bond E, Baer R (2001) Building service brands via social identity: Lessons from the sports marketplace. J Marketing Theory Pract 9(1):1–13
Villamil AM, D'Enbeau S (2021) Essential work in the US during COVID-19: Navigating vulnerability–sustainability tensions. Sustainability 13(19):10665
Wahba M, Elmanadily D (2015) Employer branding impact on employee behaviour and attitudes applied study on pharmaceuticals in Egypt. Int J Manag Sustain 4(6):145–162
Wane K (2016) Effect of career development programs on employee retention in international non-governmental organizations in Kenya (Doctoral dissertation, University of Nairobi), Nairobi, Kenya
Wilson L, Mendes IAC, Klopper H, Catrambone C, Al-Maaitah R, Norton ME, Hill M (2016) 'Global health'and 'global nursing': Proposed definitions from The Global Advisory Panel on the Future of Nursing. J Adv Nurs 72(7):1529–1540
Yameen M, Bharadwaj S, Ahmad I (2021) University brand as an employer: demystifying employee attraction and retention. Vilakshan-XIMB J Manag 18(1):26–41
Yang T, Shen YM, Zhu M, Liu Y, Deng J, Chen Q, See LC (2016) Effects of co-worker and supervisor support on job stress and presenteeism in an aging workforce: a structural equation modelling approach. Int J Environ Res Public Health 13(1):72
Yaqub B, Khan MA (2011) The role of employer branding and talent management for organizational attractiveness. Far East J Psychol Business 5(5):57–65
Zeugner-Roth KP, Žabkar V, Diamantopoulos A (2015) Consumer ethnocentrism, national identity, and consumer cosmopolitanism as drivers of consumer behaviour: A social identity theory perspective. J Int Market 23(2):25–54
Zhao X, Lynch Jr JG, Chen Q (2010) Reconsidering Baron and Kenny: Myths and truths about mediation analysis. J Consum Res 37(2):197–206
Zopiatis A, Constanti P, Theocharous AL (2014) Job involvement, commitment, satisfaction, and turnover: Evidence from hotel employees in Cyprus. Tourism Manag 41:129–140

Acknowledgements

This Research is supported by a grant from Indian Council of Social Science Research, New Delhi [Grant ID: **RFD/2021-22/GEN/MGT/69**].

Author contributions

The first author conceived and designed the study, and conducted the statistical analysis. Second author contributed to drafting the research paper and interpretation of results. All authors have revised and read the paper for important intellectual content and agreed to the present version of the paper.

Competing interests

The authors declare no competing interests. All authors have approved the paper and agree with its submission. This paper has not been published and is not under consideration for publication elsewhere.

Ethical approval

The procedures used in this study adhere to the principles of the Declaration of Helsinki. The corresponding author obtained permission to conduct the study. The research was carried out in accordance with the Helsinki Declaration guidelines and has been reviewed by the Ethical Committee of Thapar Institute of Engineering & Technology (TIEC/EC/2022-16). Informed consents were obtained from participants prior to the survey to ensure respondents have a good understanding of study objectives.

Informed consent

All surveys were conducted upon informed consents previously gained from participants, who agreed to provide data for data analysis for this study. We informed each nurse of their rights and to safeguard their personal information.

Additional information

Correspondence and requests for materials should be addressed to Ridhya Goyal.

Reprints and permission information is available at http://www.nature.com/reprints

Publisher's note Springer Nature remains neutral with regard to jurisdictional claims in published maps and institutional affiliations.

Open Access This article is licensed under a Creative Commons Attribution 4.0 International License, which permits use, sharing, adaptation, distribution and reproduction in any medium or format, as long as you give appropriate credit to the original author(s) and the source, provide a link to the Creative Commons license, and indicate if changes were made. The images or other third party material in this article are included in the article's Creative Commons license, unless indicated otherwise in a credit line to the material. If material is not included in the article's Creative Commons license and your intended use is not permitted by statutory regulation or exceeds the permitted use, you will need to obtain permission directly from the copyright holder. To view a copy of this license, visit http://creativecommons.org/licenses/by/4.0/.

© The Author(s) 2023