Working bloody miracles

SIR — Among the religious relics from mediaeval times that are today venerated by the Roman Catholic Church are remains of the blood of early saints. Some of these samples become liquefied from their usual clotted state on specific occasions when their containers are handled by religious leaders. A vial of the blood of Saint Januarius (San Gennaro), for example, has been liquefied every few months since 1389 in Naples. The event draws crowds of thousands and a television and media audience of millions. The phenomenon seems genuine, is well documented, and is still regarded as unexplained[1].

We propose that thixotropy may furnish an explanation. Thixotropy denotes the property of certain gels to liquefy when stirred or vibrated, and to solidify

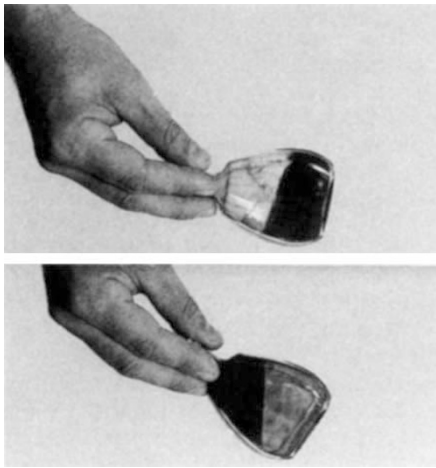

again when left to stand. Shaking or often slight mechanical disturbances thus make a thixotropic substance more fluid, even to the extent of changing it from a solid to a liquid[2].

In the typical blood-liquefaction ceremony, performed at different room temperatures, the act of checking whether liquefaction has occurred comprises repeatedly inverting the glass-walled portable relic case: a shear stress is thereby applied at this critical moment. Thus a successful performance of the rite does not involve any conscious cheating. Indeed, inadvertent liquefaction events have been observed many times over the centuries during handling for repairs to the case that contains the sealed vial[3].

In support of our hypothesis of thixotropy, we have been able to reproduce liquefaction of samples resembling the blood relics that we have prepared using substances available in the fourteenth century. To a solution of 25 g $FeCl_3.6H_2O$ in 100 ml of water we slowly added 10 g $CaCO_3$, and dialysed this solution for 4 days against distilled water from a Spectra/por tubing (parchment or animal gut work just as well; a simple procedure[4] even allows us to avoid this dialysis step). The resulting solution was allowed to evaporate from a crystallization disk to a volume of 100 ml (containing about 7.5% FeO(OH)). Addition of 1.7 g NaCl yielded a dark brownish, thixotropic sol which set in about 1 hour to a gel. The gel could be easily liquefied by gentle shaking, and the liquefaction–solidification cycle was highly repeatable[5] (see figure).

The thixotropic property of this mixture was tested[6] in a CS-Bohlin rheometer (C14 coaxial cylinders system; stress sweep test, 1 Hz, 25 °C). After a 50-min setting time inside the sample cell, a shear stress (0.15–5 Pa) was applied; from the maximum in the G″ (loss modulus) curve and the inflection point of the δ (log phase) curve, we deduce a yield stress of about 4.5 Pa, corresponding to an elastic–viscous (gel–sol) transition. The same test performed after a 50-min setting time, followed by a shear stress of 5 Pa for 30 s, showed no evidence for a transition.

After making fine adjustments by adding water or NaCl, we obtained the best visual match to the contents of the Naples vial using 30 ml of this mixture in a 50-ml, round and flattened bottle. We note that ferric chloride can be found in the form of the mineral molysite on active volcanoes such as Vesuvius.

We are attempting to prepare thixotropic mixtures from other substances. Among those that have met with some success are clays (56 g finely ground bentonite[7] stirred in 100 ml water works well), beeswax in alcohol, and inorganic pigments in linseed or castor oil.

The chemical nature of the Naples relic can be established only by opening the vial, but a complete analysis is forbidden by the Catholic Church. Our replication of the phenomenon seems to render this sacrifice unnecessary.

LUIGI GARLASCHELLI
Department of Organic Chemistry, University of Pavia, Via Taramelli, 10 – 27100 Pavia, Italy
FRANCO RAMACCINI
Viale Papiniano, 44 – 20123 Milan, Italy
SERGIO DELLA SALA
Department of Neurology, S. Paolo Hospital, Via Di Rudiní, 8 – 20142 Milan, Italy

1. *Encyclopaedia Britannica* 15th Edn, Vol. 6, 495 (1985).
2. Mardles, E. W. J. *Nature* **159**, 70–71 (1947).
3. Alfano, G. B. & Amitrano, A. *Il miracolo di S. Gennaro* (Scarpati, Napoli, 1950).
4. Guthknecht, R. *Bull. Soc. Chim. Fr.* **13**, 55–60 (1946).
5. Schalek, E. & Szegvary, A. *Kolloid Zeitschr.* **32**, 318–319 (1923).
6. Eisenberg, A. *et al. A. Rev. Mater. Sci.* **6**, 335–359 (1976).
7. Reyes, E. thesis, Univ. Granada (1977).

Quantum eraser

SIR – Scully *et al.*[1] propose several two-source interference experiments. In one, the interference effect is wiped out by measurements that are so 'delicate' as not to disturb the system, although they yield information about the source of the detected particle. In another experiment dealing with the 'quantum eraser' concept[2–4], they point out that the lost interference effect can in principle be recovered by measurements that effectively erase the information about the source of the detected particle. But, in a way, both these effects have already been observed (refs 3–5; P. G. Kwiat *et al.*, in preparation), although not described in the language used by Scully *et al.*[1], and they involve the process of parametric down-conversion in a non-linear crystal, rather than the micromaser, the principle is similar.

In the down-conversion process a beam of light of frequency ω_0 (the pump), usually from a laser, interacts with a medium having a χ^2 non-linearity in such a way that incident pump photons split into two simultaneous lower frequency photons, historically known as signal and idler, whose frequencies add up to ω_0. The two photons usually emerge in different directions simultaneously and their state is an entangled quantum state.

The quantum eraser concept discussed by Scully *et al.*[1] is realized by Ou *et al.*[3] in a different way (Fig. 1). NL1 and NL2 are two similar nonlinear crystals optically pumped by strong, mutually coherent light beams V_1 and V_2. Signal (s) and

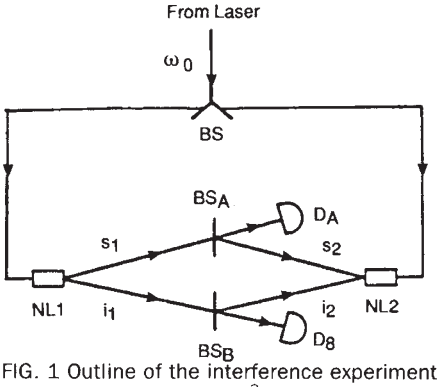

FIG. 1 Outline of the interference experiment with two down-converters[3].

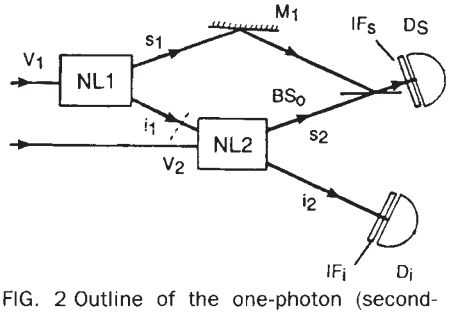

FIG. 2 Outline of the one-photon (second-order) interference experiment (from ref. 4).