Gramophone Experiments.

FOR some time I have been experimenting with the gramophone sound-box, and I came to the conclusion that with a diaphragm nipped firmly between two rubber rings there was a tendency for a vibration from the stylus bar to be cannoned back from the edge so held, and that one did not get a true ring. I made a sound-box as shown below (Figs. 1 and 2) in

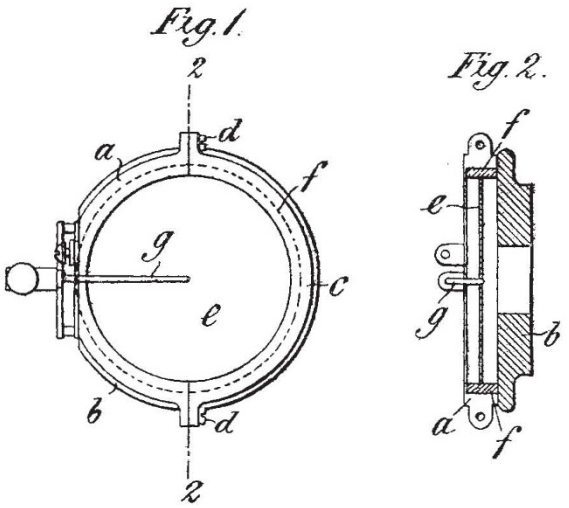

FIGS. 1 and 2.—*a* is half a split ring connected to the sound box *b*; *c* is the other half of the split ring connected to *a* by screws *d d*; the diaphragm *e* is held in position by an elastic ring *f*, which is secured to sound box by means of the two halves *a* and *c*; *g* is the stylus bar. The sound box is protected by patent.

which the diaphragm is only held on its edge, and by cutting the front of the box in half it enabled me to mount the diaphragm free from distortion. With this box there is a very marked difference.

In a band record one can differentiate each instrument more readily.

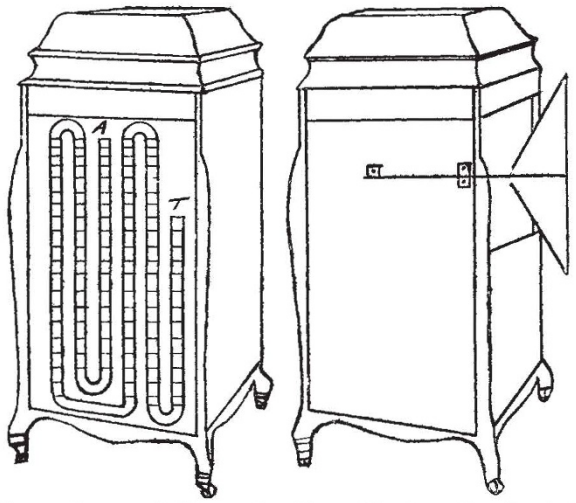

FIG. 3.—*A* connected with tapered arm: *T* with horn.

FIG. 4.—Showing position of conical reflector.

Working on Prof. McKendrick's experiments, as described in NATURE of April 20, 1911, I found that with an enclosed horn machine, as shown in Figs. 3 and 4, by passing the sound waves through about 17 ft. of 2-in. flexible metallic voice tube (the tubes all being inside the cabinet out of sight), all the noises which he eliminates by the use of peas are done away with, and the sound much increased by not using peas. In addition to this, to augment the sound I place a 2 ft. by 8 in. deep conical reflector with the apex of the cone cut off, leaving a 4-in. opening pointing to horn, as shown in Fig. 4. The result is that a musical effect is produced free from overtones and harsh sounds. ERNEST DE LA RUE.

WITH reference to the above interesting communication by Mr. Ernest de la Rue, I have to say that the method he has adopted for fixing the diaphragm of the sound-box is a marked improvement. Mr. de la Rue has kindly sent me a specimen of the sound-box, and it has given me great satisfaction, both as to quality and volume of tone. I have not had the opportunity of hearing the arrangement he has devised for removing friction noises, but no doubt it will be satisfactory. I am quite pleased with my own method, which gives excellent results, and it is adapted to the older form of gramophone which I use. The tones are sufficiently loud for a room of ordinary dimensions, and the quality, with Mr. de la Rue's sound-box, is excellent. A witty friend of mine has called my plan the pipe of peace (peas)! J. G. MCKENDRICK.

Reported Occurrence of the Dartford Warbler at the Tuskar Light Station.

I HAVE recently returned after nine weeks' residence at the Tuskar Light Station, off the south-east coast of county Wexford, where I have been prosecuting the study of bird-migration. I obtained several interesting records, including those of some rare species. To these may be added a highly interesting and at the same time important record of the occurrence of a Dartford warbler. Owing to the sedentary habits of this species its appearance at the Tuskar Rock was quite unexpected, and heretofore the bird was unknown in Ireland.

This warbler was obtained on October 27, as I am informed by the principal lightkeeper, to whom I owe my cordial thanks for the kind aid he has so often and cheerfully given me in connection with my work on bird-migration. C. J. PATTEN.

The University, Sheffield, November 10.

THE CRYSTAL SPACE-LATTICE REVEALED BY RÖNTGEN RAYS.

DURING a visit to Munich at the beginning of August last the writer was deeply interested in some extraordinary photographs which were shown to him by Prof. von Groth, the *doyen* of the crystallographic world, and professor of mineralogy at the university of that city. They had been obtained by Dr. M. Laue, assisted in the experiments by Herren W. Friedrich and P. Knipping, in the laboratory of Prof. A. Sommerfeld in Munich, by passing a narrow cylindrical beam of Röntgen rays through a crystal of zinc blende, the cubic form of naturally occurring sulphide of zinc, and receiving the transmitted rays upon a photographic plate. They consisted of black spots arranged in a geometrical pattern, in which a square predominated, exactly in accordance with the holohedral cubic symmetry of the space-lattice attributed by crystallographers to zinc blende.

Prof. von Groth expressed the opinion, in agreement with Herr Laue, that owing to the exceed-

ingly short wave length of the Röntgen rays (assuming them to be of electromagnetic wave character), they had been able to penetrate the crystal structure and to form an interference (diffraction) photograph of the Bravais space-

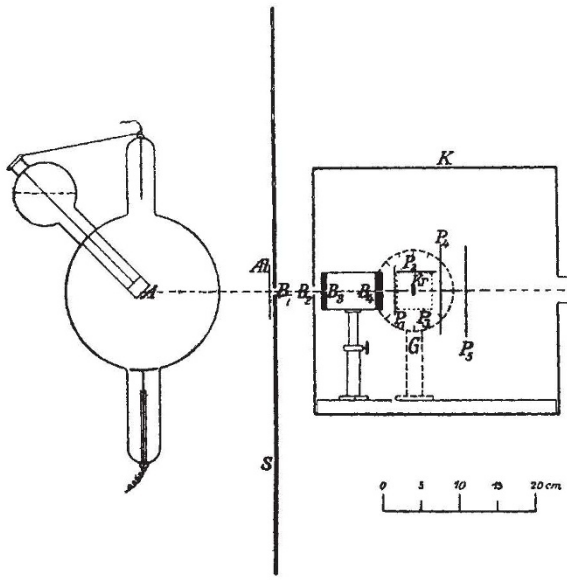

FIG. 1.—Diagrammatic representation of Dr. Laue's apparatus.

lattice. This latter is the structural foundation of the more complicated regular point-system according to which the crystal is homogeneously built up, and the points of which (the point-system) represent the chemical elementary atoms. The space-lattice, in fact, was conceived to play the same function with the short-wave Röntgen rays that the diffraction grating does to the longer electromagnetic waves of light.

The details of this work were laid before the Bavarian Academy of Sciences at Munich in two memoirs, on June 8 and July 6 last, and the two memoirs are now duly published in the *Sitzungsberichte* of the Academy.[1] Besides a diagram of the apparatus, which is reproduced in Fig. 1, they are illustrated by reproductions of a dozen of these photographs, one of which is also reproduced in Fig. 2. There can be no doubt that they are of supreme interest, and that they do in reality afford a visual proof of the modern theory of crystal structure built up by the combined labours of Bravais, Sohncke, Schönflies, von Fedorow, and Barlow. Moreover, they emphasise in a remarkable manner the importance of the space-lattice, so strongly insisted on from theoretical considerations by Bravais, Lord Kelvin, and von Groth, and from experimental considerations by Miers and the writer. They further confirm the structure assigned to this binary compound zinc sulphide, ZnS, by Pope and Barlow. Incidentally they may form a crucial test of the accuracy of the two rival theories now being discussed as to the nature of X-rays, the corpuscular and the wave theory.

[1] *Sitzungsber. der Kön. Bayerischen Akad. der Wiss., Math. Phys. Kl.*, 1912, 303 and 363.

Out of an excellent crystal of zinc blende a plate was cut a centimetre square and half a millimetre thick, parallel to a cube face (100), that is, perpendicular to one of the principal cubic crystallographic axes of the crystal (a tetragonal axis of symmetry). The plate was supported in the usual manner on the crystal holder of a goniometer, and precisely adjusted so that a beam of Röntgen rays one millimetre in diameter impinged perpendicularly upon it, after passing first through a series of screens to eliminate secondary radiations from the glass walls of the Röntgen tube. The last screen, which gave the final form to the bundle of rays, was a plate of lead a centimetre thick, pierced by a cylindrical hole 0·75 millimetre in diameter, and fitted with a delicate means of adjustment so that the axis of the boring could be brought exactly perpendicular to the crystal plate. The beam of pure Röntgen rays of circular section thus passing through the crystal normally was received, also normally, on a Schleussner-Röntgen photographic plate, which was subsequently developed with rodinal. The time of exposure in different experiments varied from one to twenty hours, the whole apparatus being excluded from all ordinary light by a covering box.

The positive print, reproduced in Fig. 2, from the negative thus obtained shows a central circular black spot, about half a centimetre in diameter, surrounded symmetrically by sixteen smaller black spots of about the same intensity, but of elliptical shape (about two millimetres long), arranged in a diagonally

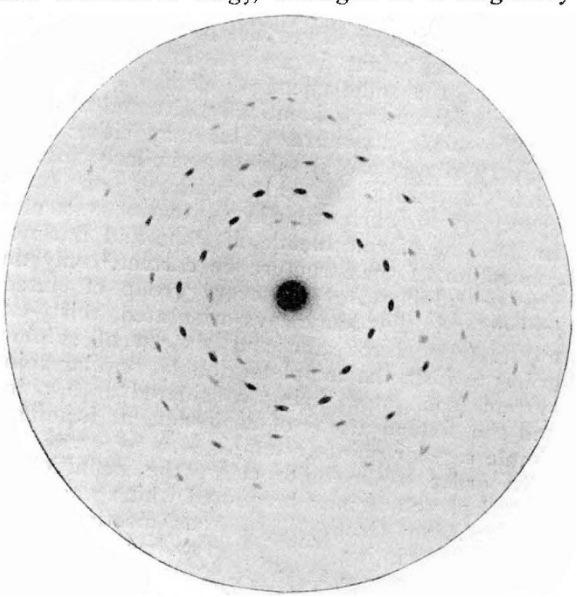

FIG. 2.—Photographic effect of passage of Röntgen rays through zinc blende.

(diamond-wise) placed square, four spots being on each side of the square and separated from each other by about half a centimetre, the centre of the square being exactly occupied by the large spot already alluded to, which was caused by the

direct rays. Outside the square of spots were others of a fainter character, also arranged with similar cubic symmetry, and there was also a faint square of spots inside the intense square, nearer to the latter than to the large central spot.

The tetragonal nature of the axis of symmetry along which the Röntgen rays were travelling through the crystal is most strikingly apparent in the photograph. One recognises at once also the presence of two perpendicular planes of symmetry in the arrangement of the spots. In fact, *the figure corresponds to the holohedral or full symmetry (class 32) of the cubic system*, in spite of the fact that zinc blende belongs to the hexakis-tetrahedral class 31 (one of the so-called hemihedral classes) of cubic symmetry. Now this interesting fact affords the most beautiful and perfect proof that it is the space-lattice (Raumgitter) of the crystal structure which is affording the figure, and that no other property than this space-lattice is concerned. For space-lattices alone always possess holohedral symmetry, and they determine the crystal system and angles and obedience with the law of rational indices. Interpenetrations, translations, and coincidence-movements of space-lattices, which afford those of the sixty-five Sohncke regular point-systems which account for the simpler cases of hemihedrism (types of crystals of lower than holohedral symmetry), are here obviously not concerned; still more emphatically, if possible, is this true of the 165 yet more complicated point-systems involving mirror-image symmetry made known to us by von Fedorow and Barlow.

In other words, it is not the stereographic arrangement of the elementary atoms which is revealed by the photographs, but the underlying space-lattice, which is arrived at by taking the atoms of the same chemical element which are similarly (sameways, identically) situated throughout the whole structure. This may either mean (in very simple cases) taking a similarly situated atom in each chemical molecule, or (more generally) one such atom in a group of molecules. In the case of zinc blende, if Pope and Barlow's conception of the structure be correct,[2] only one zinc or sulphur atom in every group of sixteen molecules is thus sameways orientated, thirty-two atoms (sixteen of zinc and sixteen of sulphur) going to form the complete, double, regular point-system (each atom being considered as a point, and the sixteen atoms of each element forming a simple regular point-system).

In order to be quite clear, the definition of crystal structure may be quoted which was given by Prof. von Groth at the 1904 meeting of the British Association. Mr. Barlow has since amplified the statement so as to include the more complicated cases, but as these are not concerned in the case of zinc blende the definition is fully adequate for our purpose.

A crystal—considered as indefinitely extended—consists of *n* interpenetrating regular point-systems, each of which is formed from similar atoms; each of these point-systems is built up from *n* interpenetrating space-lattices, each of the latter being formed from similar atoms occupying parallel positions. All the space-lattices of the combined system are geometrically identical or are characterised by the same elementary parallelepipedon.

Now the combined system of zinc blende is probably that of the type 63 of Sohncke, and $9a_1$ of Barlow, and in their 1907 memoir, already alluded to, Pope and Barlow describe the probable constitution of the crystals of this substance, on the basis of their assumption that the spheres of influence of the zinc and sulphur atoms are approximately equal, the fundamental acting valency of both elements being here considered as dyadic. If the spheres of influence of the zinc and sulphur atoms, or the parallelohedra into which they are compressed when the interstitial spaces are removed in attaining their closest packed arrangement, were quite equal, the symmetry would be cubic holohedral; but the slight difference in size and the different effect of compression on the atoms of the two elements degrades the symmetry into the hexakis-tetrahedral class 31, next lower in the cubic system. This constitution of the crystals of the simple binary compounds, such as zinc sulphide, does not depend, however, on Pope and Barlow's version of the theory of crystal structure; for the sizes of the spheres of influence of the atoms of the two elements are assumed to be approximately equal, just as is the case when valency is not considered to enter into the problem. It is equally the probable one according to the theory of von Fedorow, based on parallelohedra of cubic and hypohexagonal types, which has led him to the remarkable advance in crystallochemical analysis described by the writer in NATURE of July 18 (p. 503); and as the parallelohedron of von Fedorow represents the combined system (that of Pope and Barlow only representing a single atom), its central representative point is a point of the space-lattice itself. The definition of von Groth is thus equally applicable to both versions.

Thus we are dealing with a crystal supposed to be constructed of two interpenetrating regular point-systems (type No. 63 of Sohncke), corresponding to zinc and sulphur atoms respectively; each of these is composed of sixteen interpenetrating space-lattices, each and all formed from one of the two elements only, and composed of atoms of that element occupying parallel positions. All the thirty-two space-lattices of the double or combined system are geometrically identical, and are characterised by the same elementary parallelepipedon, a cube in this case of zinc blende. Hence one type of space-lattice characterises the whole crystal, and it is this space-lattice, *formed by similar* (consisting of the same element) and *simularly situated atoms*, which has apparently afforded the photograph of spots showing holohedral cubic symmetry. This is equally true whether the structure attributed by Pope and Barlow to zinc blende, or a less complicated one, be the correct structure.

These are the crystallographical facts which must be taken into account in any discussion as

Journ. Chem. Soc. Trans., 1907, xci., 1171 and 1178; see particularly Fig. 17 on p. 1171 and Fig. 1 on p. 1152.

to the nature of these photographs, which does not appear to have been the case in a letter from Prof. W. H. Bragg, which appeared in NATURE of October 24 (p. 219). It would be very interesting if Prof. Bragg would give a revised account of his views after considering these crystallographic data, with which perhaps only a specialist could be expected to be familiar. For it is quite possible that his conclusions may still prove valid when this has been done. But until then judgment must be suspended.

In further confirmatory experiments the crystal was adjusted so that the primary Röntgen rays fell perpendicularly on an octohedral face (111), and subsequently on a rhombic dodecahedral face (110). In the former case the trigonal nature of the symmetry axis along which the rays passed was clearly revealed by three pairs of spots arranged symmetrically to positions 120° apart, while in the latter case the spots indicated the diagonal nature of the axis by being arranged in two pairs only, 180° apart. When the crystal was rotated a few degrees out of exact adjustment, spots of like character still appeared, but no longer symmetrical to the central large spot, affording another confirmation that it is the space-lattice which is responsible for the photographs.

In his Becquerel Memorial Lecture to the Chemical Society on October 17, the text of which is just published,[3] Sir Oliver Lodge referred in the following words to a brief announcement of the important work of Laue and his co-workers which was made by the writer on his return from Munich in September.

> This, if it be a fact, will have to be recognised as a striking and admirable case of scientific prediction, the various crystalline structures and accuracy of characteristic facets having been indicated by theory long before there was any hope of actually seeing them; so that once more—always assuming that the heralded discovery is substantiated—the theoretical abstraction will have become concrete and visible.

It will now be clear, from the detailed memoirs just published, that the writer's announcement is fully substantiated. Crystallography thus affords to its sister science Chemistry the first visible proof of the accuracy of Dalton's atomic theory, and now enters into a new sphere of still greater usefulness. The important work of von Fedorow on crystallochemical analysis, described in the writer's last communication to NATURE (*loc. cit.*), is based essentially on the assumption of the space-lattice structure of crystals which is now rendered visible to our eyes, for the centres or analogous points of his parallelohedra form either one of the fourteen space-lattices or one of nine simple Sohncke point-systems composed of interpenetrating space-lattices; that work is thereby enhanced in value and placed on an absolutely trustworthy basis. Crystallography has thus become an exact science leading us to a practical knowledge of the hitherto mysterious world where Dalton's atoms and molecules reign supreme.

A. E. H. TUTTON.

[3] Journ. Chem. Sac. Trans., October, 1912, CI, 2028.

GEOPHYSICAL MEMOIRS.[1]

BY the authority of the Meteorological Committee, and under the style and title of Geophysical Memoirs, the publication of a series of investigations has been commenced with the issue of the four "blue-books" before us. It is evident that a high standard of value is contemplated; if possible, higher than that of previous "Reports of Investigations in Dynamical and Statistical Meteorology," which appear in the same section of Meteorological Office publications. We shall look forward with interest to the succeeding memoirs, which represent a genuine attempt to dispel the reproach often cast upon meteorologists as mere collectors of undigested statistics with no real claim to the title of men of science.

The subjects of the memoirs already received are quite independent. In No. 1, the Marine Superintendent of the Meteorological Office (Campbell Hepworth, Commander R.N.R.) discusses the effect of the Labrador current upon the surface temperature of the North Atlantic, and of the latter upon air temperature and pressure over the British Isles. It is interesting, in view of the vagaries of the latter within even the last eighteen months, to find it definitely stated that the much-discussed prevalence of ice in the Atlantic is *not* a cause of cold weather here, but only a symptomatic effect of the cold Labrador current, the meeting of which with the Gulf Stream is held responsible for the notorious fogs off the banks of Newfoundland. The discussion of the data for 1903 to 1907 and for most of 1911 is illustrated by an interesting series of plates giving mean sea-surface isotherms of the North Atlantic for January, April, July, and October, thermo-isopleths for surface temperature between Florida Straits and Valencia (Ireland), mean annual surface temperature for every 2° square in the North Atlantic, and separate diagrams for each of the years under discussion, giving monthly prevalence of ice in the Atlantic measured by 1° squares in which it was observed, the sea temperature, and the air temperature and pressure for three British coast stations, Sumburgh Head, Shields, and Valencia. The author's great experience, both at sea and in the office dealing with the mass of observations communicated from ships, renders his views especially worthy of consideration.

In No. 2, Mr. W. H. Dines, the foremost British investigator of the upper air, continues some previous work with discussions of the vertical

[1] (1) "The Effect of the Labrador Current upon the Surface Temperature of the North Atlantic, and of the latter upon the Air Temperature and Pressure over the British Isles." By Commander M. W. C. Hepworth, C.B., Pp. 10+9 plates. Price 9*d*.

(2) "The Free Atmosphere in the Region of the British Isles. Further Contributions to the Investigation of the Upper Air, comprising the Vertical Temperature Distribution in the Atmosphere over England, with some remarks on the General and Local Circulation: Abstract of a paper printed in Volume ccxi of the Philosophical Transactions, Series A, and Total and Partial Correlation Coefficients between Sundry Variables of the Upper Air." By W. H. Dines, F.R.S. Pp. 11–50+plates 10–12. Price 1*s*.

(3) "Graphical Construction for the Epicentre of an Earthquake." By G. W. Walker. Pp. 51–54+plate 13. Price 3*d*.

(4) "On the Radiation Records obtained in 1911 at South Kensington, together with a comparison between them and the Corresponding Absolute Observations of Radiation made at Kew Observatory." By R. Corless. Pp. 55–61+plate 14. Price 3*d*. (London: H.M. Stationery Office and the Meteorological Office, 1912).