THE INDUSTRIAL USES OF OZONE.

THE production of ozone by the discharge of a frictional electrical machine was originally noticed by Van Marum in 1785, but it was Schönbein in 1840 who first actually prepared it and gave it the name of "ozone," from the Greek ὄζων, meaning smell. He also showed that it was much more active as an oxidising agent than ordinary oxygen. As is well known, it is produced by the slow oxidation of phosphorus, and the peculiar odour of this element is really not the odour of phosphorus, but the odour of ozone, and this can be shown to be the case by adding small quantities of substances to phosphorus, which prevent its oxidation, when the odour is no longer perceptible. It also appears to be produced in small quantities by the burning of hydrocarbons. It is likewise formed in the open country, partly by evaporation, but probably most largely by the action of ultra-violet rays from the sun. This at any rate would account for its formation in the higher regions of the atmosphere. It is formed in considerable quantities when fluorine acts upon water. If a drop of water is introduced into a tube filled with fluorine, reaction immediately ensues, and the tube becomes filled with deep blue vapour. This is ozone which has a blue colour when concentrated.

Ozone is also produced at the anode when acid solutions of water are electrolysed, particularly if the electrode is a platinum tube through which cold water is passed. By this means Fischer and Massenez have obtained oxygen containing 25·27 per cent. of ozone in electrolytic oxygen by electrolysing at 0°. Such a process would not, however, be satisfactory on a large scale, owing to the cost of production. It is also produced by heating and suddenly cooling oxygen, and also by the action of the ultra-violet rays, produced by the mercury-vapour lamp. The only method employed commercially to prepare it is to subject oxygen to the action of the silent electric discharge, the oxygen thereby receiving electrical energy and becoming converted into ozone thus:—

$$3O_2 + \text{energy} = 2O_3.$$

As the formation of ozone is an endothermic reaction it follows that it is less stable than oxygen, and is in a condition in which it will readily part with the energy originally received electrically in the form of heat—*e.g.* when the pure gas explodes, or as chemical energy when it acts as an oxidising agent. The thermochemical equation accounts for its instability:—

$$O_2 + O = O_3 - 32{,}400 \text{ cal.}$$

It is only within the last decade that the employment of ozone for the purification of water has been practically worked out and actually employed commercially. Various processes have been suggested and employed for the sterilising of water, and it will perhaps be as well in the first place to refer to the different forms of construction of the apparatus. All the apparatus employed depends upon some method or other of obtaining a silent electric discharge; consequently very high electrical potential is necessary. In general the silent discharge takes place between conducting plates separated by means of a dielectric. The original ozoniser of this type was the invention of W. von Siemens, and consisted of two concentric tubes, which are coated on their outside surfaces with tinfoil, the glass of the tubes acting as the dielectric. Berthelot used glass as the dielectric and a liquid as the conducting material. Modifications of both these forms are used commercially. The "Ozonair" apparatus consists of wire gauze as the conductor, separated by mica as dielectric. The ozoniser is enclosed in an iron case when the ozone is to be produced for water sterilising or similar purposes. When it is required for the purification of the air or for ventilation it is open and the air is drawn through the apparatus and distributed by means of a fan. Fig. 1 shows a semi-enclosed type in which the grid can be entirely enclosed by completely boxing in. The electrical tension employed is about 7000 volts.

The Siemens-Halske type which is used for water sterilising is illustrated in Fig. 2. It consists of concentric pipes D and E placed one within the other; the inner one is of aluminium, and is connected with the leads carrying a high-tension current marked in the diagram as +, as this is the positive pole. The glass cylinder E is the other pole; it is surrounded with water which can be circulated for cooling purposes, and as this is "alive" it receives its charge from it. The water which surrounds the glass cylinder receives its electricity from the iron-containing box, which is earthed, and consequently forms the negative pole. The annular space between D and E is where the silent discharge takes place. The complete apparatus consists of a cast-iron box divided into three chambers, the lower chamber for receiving and conveying the air to the ozone tubes, an hermetically sealed middle compartment into which the ozone tubes are inserted by means of a stuffing-box-gland, and an upper compartment for collecting the ozonised air. An alternating current at 8000 volts is employed.

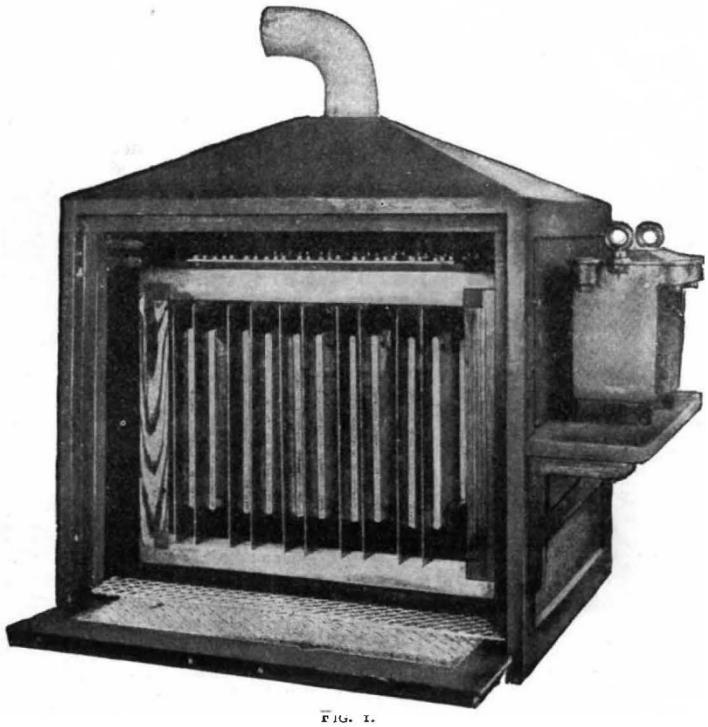

FIG. 1.

A very high tension apparatus is the Abraham Marmier, in which a potential of 40,000 volts is employed. It is made up of a number of hollow cylindrical electrodes, which are insulated by means of glass and contained in a box. For cooling purposes water is circulated through the electrodes.

The Otto ozoniser consists of a series of transverse plates, so arranged that a dielectric plate is placed between the electrodes. The air is drawn or blown between the plates, the silent discharge passing between the spaces of the plates and thus ozonising the air. Fig. 3 shows diagrammatically the manner in which the air passes through the apparatus. An alternating current at 6500 volts is employed. In another form of the Otto ozoniser there is a metal chamber, the walls of which make one electrode. Within this chamber a number of sheet steel rings are mounted on an axle, the edges of the rings being sharpened. When in operation this bunch of rings is rotated and forms the other electrode. No dielectric is used. Air is blown through the box, the rotation of the central electrode causing thorough mixing. If an arc is struck it is immediately extinguished, as the electrode rotates because each of the rings has a groove cut in it. The tension of the current employed is about 25,000 volts.

The providing of a pure water supply to our towns, cities, and villages is of the very highest importance.

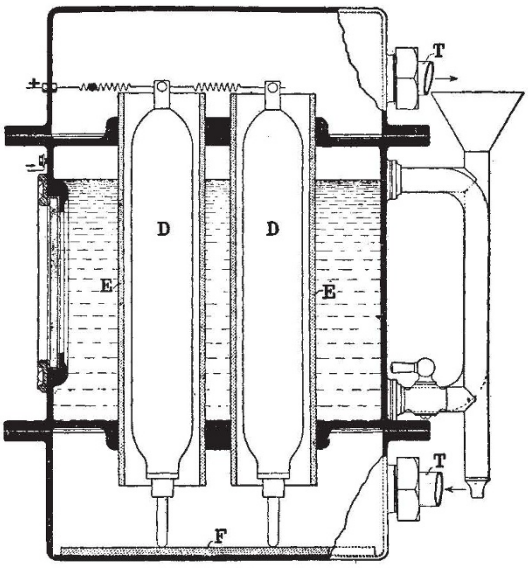

FIG. 2.

In some cases where the water comes from sources in which contamination of the supply is out of question, such as from mountain lakes or from deep springs, then no special purification is necessary. In other cases, however, where the source of water admits of, or even invites, contamination, purification in some way or other is a *sine qua non*. The method chiefly employed is mechanical filtration. Chemical methods, such as treatment with oxidising agents, can only be carried out on a small scale. The sand filtration method is partly bacterial and partly one of filtration. The surface of the sand becomes coated with a slimy deposit which is partly of bacterial formation; consequently the water first passes through the bacterial layer which exerts a beneficial effect in destroying harmful bacteria, and also makes a much finer filter than can be produced by the more or less coarse-grained sand, and then it percolates through the sand. Sometimes, however, owing to floods and special contamination, the filter-bed breaks down, and then it may be a very serious matter for the populace. Therefore where there is a possibility of water at any time being contaminated, purification by some other means is advisable.

In the Ozonair process, which is being used in this country, the ozonisation of water takes places in three stages—that is to say, the same water comes into contact with ozone three times. In the first place, the water is atomised in presence of ozonised air, and the minutely divided particles of water then fall upon the upper part of a pile of glass spheres, or other scrubbing arrangement, packed in a tower. As the water percolates down it meets an ascending stream of ozonised air. At the bottom of the tower it falls into a tank through which ozonised air is blown by means of nozzles beneath the surface of the water in the tank. The tank is in the shape of an inverted cone, and a syphon is carried to the bottom of the cone for carrying off the water. Owing to this arrangement, all the water gets equally acted upon before being carried away. The syphon discharges the water on to steps, so that it cascades down into the storage tank. As it cascades the water comes into contact with the atmosphere, and the excess of ozone is given up. Fig. 4, which is self-explanatory, shows diagrammatically the arrangement of the plant. Should the ozoniser get out of order or cease to work, the water supply is automatically cut off.

The Siemens-Halske system is largely employed on the Continent, the largest plant erected by them being at St. Petersburg. In this plant the method of sterilisation is slightly different from that previously employed. The water is conveyed into an emulsifying tower by means of special injectors, the ozonised air being used to force the water into the bottom of the

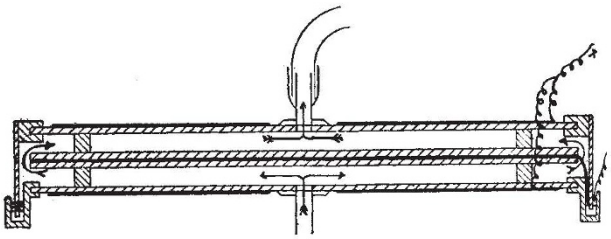

FIG. 3.

tower. The water and ozone therefore enter together, and consequently very complete emulsifying takes place. The water flows over from the top of the tower, and is cascaded down to the reservoir. In this particular case the water of the Neva is the source of supply. It is very turbid, and is therefore previously treated with 30 to 40 grams of aluminium sulphate per cubic metre of water, and after settling for two hours it is filtered. The water in the first place contains a large amount of pathogenic and harmful bacteria, but after ozonising these have all disappeared. In all probability a considerable number are removed by the precipitation treatment, because when water is softened by means of lime or other precipitant it is always found to contain less bacteria than before treatment. But, of course, precipitation could not entirely be depended upon for sterilising purposes. On the other hand, ozone can be depended upon to sterilise. The St. Petersburg plant is capable of dealing with 2000 cubic metres of water per hour. There are three 150-h.p. steam engines for motive power, one, however, being always held in reserve. The whole output of the engines is not required for working the ozonisers, as the power is also used to operate the pumping and filtering plant and all the other necessary mechanical appliances. The ozonisers are worked with a three-phase alternating current at 7000 volts and 500 periods.

Other places on the Continent where ozone is used for sterilising the public water supply are Paderborn, Wiesbaden, Paris, Hermannstadt, Florence, Nice, Chartres, Villefranche, Rovigo, and Chemnitz. Two

new ozone plants are being installed in Paris with a daily output of 45,000 cubic meters of water.

In the United States ozone is employed at Philadelphia. The water ozonised is from the River Schuylkill in West Philadelphia. This is extremely impure, and is said to contain 2,500,000 bacteria per cubic centimetre. After treatment the number is reduced to 25 per cubic centimetre. The *Bacillus coli* which previously abounds is completely destroyed. The colour of the water is improved and its offensive odour removed.

It is obvious from the foregoing that the employment of ozone for sterilising water is now being carried out on a very considerable commercial scale, and it is found not only efficient but also very cheap. In this country to sterilise 1000 gallons of water the cost is from one halfpenny to one penny, depending upon the size of the plant and the cost of the electrical power. In connection with the sterilisation of water, it should be mentioned that it is an easy matter by means of petrol motors to use ozone for sterilising water during campaigns. Indeed, during the Russo-Japanese war a portable plant supplied by Messrs. Siemens and Halske was employed with great success. The apparatus consists of two small wagons, each of which is hauled by one horse. The small dynamo and all the pumping appliances, &c., are worked by means of a petrol motor.

Ozone apparatus have also been devised for fitting on to the ordinary water mains, the ozoniser only functioning when the water tap is turned on. The water passes through a special form of injector which causes a thorough admixture with the ozone. At the moment the water is drawn off it smells of ozone, but within a few minutes the odour has gone off, and the water is fit for drinking purposes. This form of ozoniser is very useful in hospitals and other public institutions.

A new method for production of ozone in large quantities has just been described by E. H. Archibald and H. von Wurtenberg. Dilute sulphuric acid is electrolysed with a direct and alternating current. The alternating current acts as a depolariser, and the production of ozone is 300 times greater than with a direct current only. The maximum yield was obtained with an alternating current of 6 amperes and a continuous current of 0·25 to 1 ampere. Increase in the frequency of the alternating current increases the ozone yield.

Before leaving the question of water sterilisation another method which is now being employed should be mentioned. It has been found that the ultra-violet rays are very efficient for sterilising water. The rays are produced by a mercury-vapour arc enclosed in a quartz tube. Under the influence of the rays from a mercury-vapour lamp of silica with a current of 3 amps. at 220 volts *B. coli* are killed in

1 second	at a	distance	of	10	centimetres
4 seconds	,,	,,		20	,,
15 ,,	,,	,,		40	,,
30 ,,	,,	,,		60	,,

Where water is to be sterilised it is necessary for it to be clear, because the ultra-violet rays are very rapidly absorbed. This is particularly the case if water contains colloids. The various classes of microbes are not equally sensitive; *e.g.* conditions which kill *staphylcoccus* in five seconds will kill cholera in from twenty to sixty seconds.

Lamps of glass are useless, because the glass absorbs a great portion of the rays. Fig. 5 shows the construction of the apparatus for water sterilisation brought out by the Cooper-Hewitt Westinghouse Co.

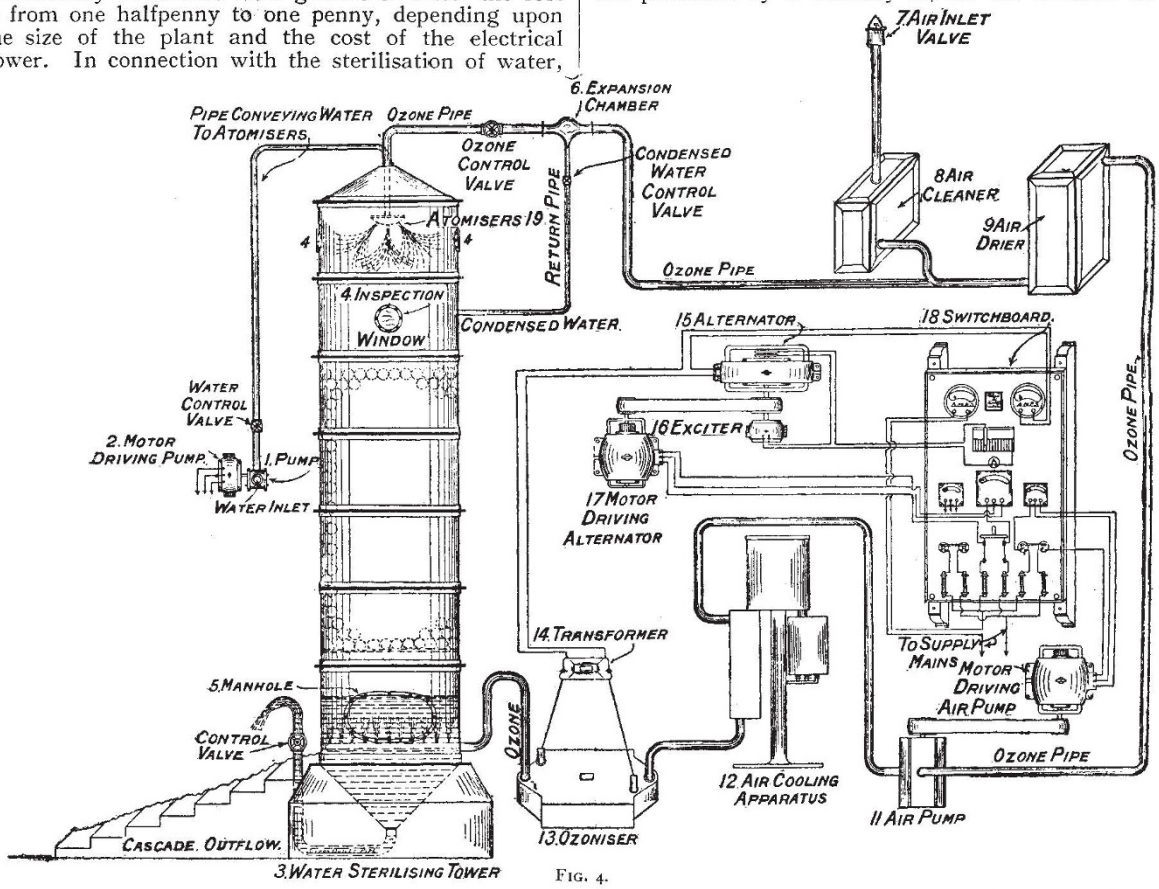

FIG. 4.

The apparatus is made to sterilise different units, the largest size being capable of dealing with 600 cubic metres in twenty-four hours. The diagram practically explains itself. L is the lamp, which is enclosed in a box with rock-crystal windows. The water to be

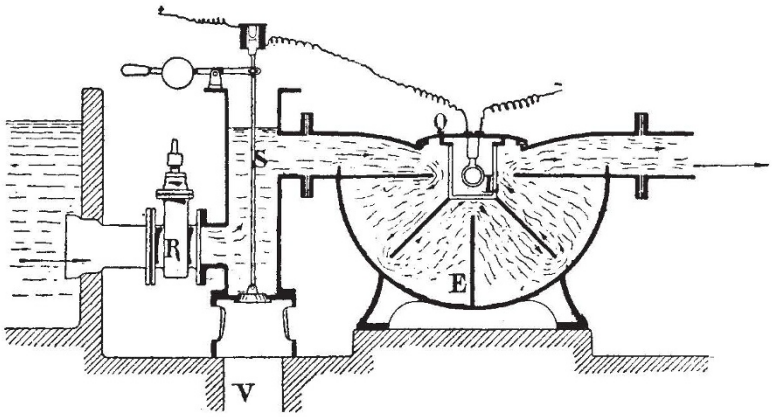

FIG. 5.

sterilised, which must, if not clear, be previously filtered, passes in at R, and by means of baffling is caused to pass three times past the rays in the steriliser E. In case of the lamp going out, there is a valve S, electromagnetically operated, which opens, and immediately prevents the water from flowing through the sterilising chamber. This apparatus is used at Rouen, where the water for the suburb Maromme-les-Rouen is sterilised by three units. Several other cities in France are also experimenting with ultra-violet sterilisation. For small scale work the ultra-violet sterilisation is very well adapted, but ozone is better for large scale operations. The great advantage of both of these processes is that nothing is added to the water. With the ultra-violet rays it is a question of killing by means of light. With ozone the sole product remaining at the end of the operation is oxygen.

Ozone, or ozonised air, is most useful for ventilating purposes. The air of crowded rooms is dangerous to health from the large percentage of noxious organic impurities, many of them bacterial, which it contains. Ordinary ventilation, while minimising these, does not entirely do away with them. If, however, the fresh air driven into the room for ventilation be previously ozonised, the organic impurities become oxidised. Ozonised air is, as a matter of fact, very largely employed in the ventilation of theatres and other large public buildings. Complaint is continually made as to the evil effect of the atmosphere of the House of Commons upon the members of Parliament, and this, in spite of strenuous efforts on the part of ventilation engineers. Probably the atmosphere would be greatly improved if the ventilating shaft which supplies fresh air to the House had an ozonising apparatus placed in it. At the Turin Exhibition the beneficial effects of ozone were forcibly brought before the notice of the writer. Ozone plant is now being employed in the ventilation of the Tube Railways with beneficial results.

Ozone is used in the manufacture of vanillin from isoeugenol. It has also been found advantageous in brewing. Weak yeast appears to be strengthened by ozone and to act more vigorously if the air of the fermenting house is kept fresh with ozonised air. Ozone is used for bleaching oils and fats, the results being very striking. It is also used for blowing oils such as linseed oil. The bleaching effect of ozone has been found useful in laundries and for bleaching delicate fabrics. Flour is bleached by means of ozone. In this case, however, as a rule the apparatus is arranged to give at the same time small quantities of oxides of nitrogen. The flour is not only bleached but also sterilised. Unbleached rye meal which contained 2400 micro-organisms per gram before treatment contained 1600 per gram after treatment. In another case, unbleached wheat flour contained 540 organisms before treatment, and 170 after treatment.

The maturing effect of ozone on wines and spirits is remarkable. Spirit which requires years for ageing is matured in a remarkably short time by emulsifying with ozone. The use of ozone in tobacco factories to aid the maturing has also been suggested.

F. MOLLWO PERKIN.

MELANESIANS.[1]

SEVERAL books, mainly by missionaries, have been written on particular islands or groups of islands in Melanesia, but with the exception of Dr. Codrington's "The Melanesians: Studies in their Anthropology and Folk-lore" (1891), there has been no general book on Melanesia, and even Dr. Codrington says very

FIG. 1.—The Rev. John Pengoni and his father. From "Islands of Enchantment."

[1] "Islands of Enchantment: Many-sided Melanesia." Seen through Many Eyes, and recorded by Florence Coombe. Pp. xxvii+382. (London: Macmillan and Co., Ltd., 1911.) 12s. net.