For convenience the whole arrangement is tilted at an angle of 45°, and the light illuminating the plates reflected by mirrors *m* from a window at the back of the observer.

The setting of the plates may be effected by turning a micrometer to the inclination of the base by means of a graduated circle, and making both sets of R-lines agree in inclination and height with the micrometer wires. The second micrometer is then set by making its wires parallel to the vertical R-lines on either plate.

The vertical R-lines are combined by the microscopes, but the horizontal lines only when the distance between the centres of the pictures is equal to that between the microscope object glasses. In making a measurement, the plates are moved by the slow-motion screws on the slides of their carriers and of the stage until the zero square of one microscope fits a zero square of the corresponding plate and the zero wires of the other microscope coincide with a pair of vertical R-lines on the second plate. The points in the field of view may then be bisected without disturbing the zero settings.

The coordinates of a point on the plate are given by the direct readings of the micrometer heads added to the value of the R-line considered. The stereoscopic difference results from the difference of the x's on the two plates.

Range of the Method.—In practice, the range of the method is limited by the blurring of distant detail by light diffused in the atmosphere. This "aërial perspective" is reduced by the use of orthochromatic plates and an orange screen cutting off the rays of shorter wave-length which form the blue haze, but even then

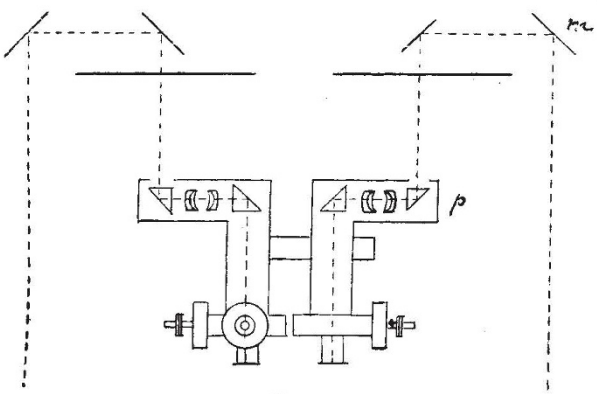

FIG. 4.

the effective range would probably not exceed some 5 miles, or 8 kilometres.

On the other hand, the difference in phase of the objects would prevent their ready combination at distances less than three to four times the length of the base. The view would then correspond with that of a model seen with the eyes at a distance of 10 inches from the nearer edge.

Let $2b$ be the length of the base and α the angle subtended by it at a distance y. Then:

$$y = b \cot \frac{\alpha}{2},$$

$$\frac{dy}{y} = -\frac{b}{y} \cdot \frac{d\alpha}{2 \sin \frac{2\alpha}{2}}$$

$$= -\frac{d\alpha}{\sin \alpha}.$$

Let 1/100th of an inch or 0·25 mm. be the admissible error on the plan, 8 kilometres the limiting value of y and $\Delta \alpha = 20''$. On the scale of the Canadian photographic surveys, 1/40000, the maximum error allowable will be 10 metres at 8 kilometres, or $\Delta y/y = 1/800$. Then $\alpha = 4° \; 27'$ and $2b = 620$ meters.

By increasing the base to 2 kilometres, a maximum possible accuracy at 8 kilometres of 1/2500 of the distance, or 3 metres, would be attained, but the area mapped would be reduced to a narrow strip.

With the base of 620 metres, the area mapped with a plate of diameter equal to the focal length of the lens would be contained between the limiting circles, at 8 and 2·5 kilometres, shown at *d* and *n* (Fig. 5), and would amount to 22 square kilometres on either side of the base, or more correctly to that portion not masked by the nearer topographical features.

The error in x will be due to that in y and that of the x-co-ordinate on the plate. We may write:

$$(\Delta x)^2 = \left(\frac{y}{f} \Delta l\right)^2 + \left(\frac{x}{y} \Delta y\right)^2.$$

With a lens of 150 mm. focal length and an error of ·025 mm. in the plate x's, the maximum error is, for the base and the scale of plan considered, 5 metres, or on the plan 0·12 mm.

The error in height is given by the same expression. At the maximum distance, the second term cannot exceed $(1/4 \, \Delta y)^2$ if the difference in height between the base and the distant points does not exceed 2000 metres. In absolute amount the total error for points at extreme distances would be $\pm$ 2·75 metres.

The contour lines should then, in the case already considered, be accurate to 0·25 mm. on slopes greater than 15°, but the actual accuracy will be reduced to some extent by the uncertainty of the correction for refraction. This correction, combined with that for curvature, can be applied at sight from a small table with y-argument.

By reducing the base, pairs of photographs may be taken within a confined space, as when mapping hidden valleys. The

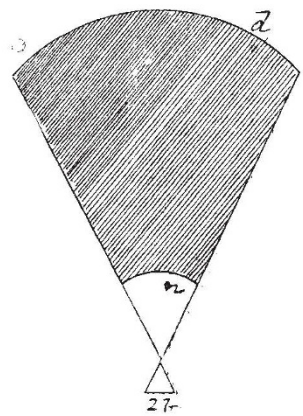

FIG. 5.

method can also be combined to any extent with the ordinary methods of photographic surveying. It would be of particular advantage in the mapping of large areas of mountainous country.

UNIVERSITY AND EDUCATIONAL INTELLIGENCE.

OXFORD.—The following examiners have been appointed in the Natural Science Schools:—Mr. William B. Croft, Pembroke College (physics), Dr. Alexander Scott (chemistry), Dr. Leonard E. Hill (animal physiology), Mr. John Watts, Balliol College (chemistry)—*vice* Mr. Elford, resigned.

THE 237th meeting of the Junior Scientific Club was held on May 29, in the museum. Mr. A. F. Walden, New College, demonstrated a new method of distinguishing between calcium and strontium. Mr. E. A. Cockayne, Balliol, exhibited a natterjack, and Mr. Lattey, Trinity, read a paper on the occurrence of natural gas in England.

MR. DAVID ROBERTSON, lecturer in electrical engineering at the Bradford Municipal Technical College and formerly assistant lecturer at the Glasgow and West of Scotland Technical College, has been appointed professor of electrical engineering at the Merchant Venturers' Technical College, Bristol.

THE annual exhibition of work from schools and classes of the School Board for London will be opened by Lord Reay on

June 18. A section will be devoted to scientific apparatus constructed by teachers and pupils. The Board, in including this section has in view the possibility that, by encouraging the construction of apparatus by its teachers and pupils, it may be possible to reduce the present heavy accounts for scientific apparatus and also that, at the same time, it may assist in familiarising the pupils with the practical use of apparatus. The sight of apparatus of a cheap and "home-made" character will be the means of encouraging the study of practical science at home.

ENCOURAGEMENT is being given to the study of natural history or nature-study in many districts. A programme has been sent to us of a series of Saturday afternoon rambles organised for the benefit of teachers by the Technical Instruction Committee of the Essex County Council. Conducted in the sympathetic spirit of the true student of animate nature, the excursions may be made a source of pleasure and profit to all who participate in them, but great care must be taken to prevent them from becoming expeditions of extermination. Prof. Miall points out this danger in a letter to the third number of the *Nature-Study Journal* published by the South-Eastern Agricultural College, Wye. The journal also contains short papers on uses of the balance, the metamorphosis of frogs, bees and flower shapes.

LORD ROSEBERY referred to the Education Bill in his address at Leeds on Friday last. He summed up the Bill by saying that "it discountenances efficiency in primary education, rewards inefficiency, starves secondary education, and ignores altogether the training of teachers." Education, he urged, is a national and Imperial duty, and its development should not be dependent upon local rates. The Bill provides that municipal authorities may apply the balance of the "whisky money," and may spend up to a twopenny rate in order to provide for the higher secondary and technical education so urgently needed in this country. This is not only inadequate in amount, but unsound in principle, and, remarked Lord Rosebery, "the putting of education on the rates is perhaps the surest method that the Government could have chosen for restraining the educational development of this country."

NEW regulations for secondary day schools have been issued by the Board of Education. The schools will be in two divisions—one containing what have hitherto been designated schools of science or organised science schools; and the other, secondary schools having courses in which science is given fair attention. The schools in Division A must provide a thorough and progressive course in science, together with the subjects of a general education. The obligatory subjects are mathematics, physics, chemistry, drawing and practical geometry; and not less than fifteen hours per week must be allotted to instruction in them, of which not more than five hours are to be given to mathematics. Practical work must be done in every science subject. On the completion of the elementary course, students may select physical, mechanical or biological courses, such as have been carried on for some time in schools of science. In Division B of secondary day schools, not less than nine hours a week must be given to science instruction in forms for which grants will be made. The instruction must be both theoretical and practical, and the laboratories must be suitably equipped for the subjects sanctioned.

THE executive committee of the National Association for the Promotion of Technical and Secondary Education adopted the following resolutions referring to the Government Education Bill at a meeting held on May 30:—(1) That this executive committee, while expressing no opinion on the more controversial aspects of the Education Bill relating to elementary education, regards it as essential to the interests of technical and secondary education, (*a*) that the fund available under the Local Taxation (Customs and Excise) Act, 1890, should be permanently appropriated by the Bill and devoted by the local authorities to the purposes of technical and secondary education; (*b*) that the areas of administrative control over technical and secondary education by local education authorities should, as provided by the Bill, continue to be the administrative counties and county boroughs or combinations of such areas. (2) The executive committee also considers it highly desirable, (*a*) that clauses 3 and 15 should be so amended as not to deprive any local authorities of the power they now possess to levy a penny rate for the purposes of technical and secondary education; (*b*) that the local authorities should be represented on the governing bodies of all institutions to which grants are made.

IT has already been announced that Mr. Alfred Mosely has arranged to send out to America two commissions of inquiry—one to study methods of education in their bearing on commercial and industrial efficiency, and the other industrial organisation and the problems of labour and capital. We learn from the *Times* that Mr. Mosely has just returned from the United States, where, in conjunction with President Butler, of Columbia University, he has settled the provisional itinerary of the educational commission. The exact date when this commission will start has not yet been decided. The programme arranged by President Butler seems to be of an exceedingly instructive and comprehensive character. Among the places to be visited are New York, with Columbia University, Auchmuty trade schools, the Educational Alliance, the University Settlement Society and the Normal College; New Haven, Conn., where Yale University will be inspected; Boston, with Harvard University and the Massachusetts Institute of Technology; Philadelphia, for the University, the Drexel Institute, the Manual Training Schools and the Commercial Museum; Baltimore, where the Johns Hopkins University and Hospital will be seen; Washington, for the Smithsonian Institution, National Museum and the Department of Agriculture; Pittsburgh, with the Carnegie Museum; Chicago, with the University, the School of Education, Prof. Dewey's University School and the Armour and Lewis Institutes; and Ithaca, N.Y., where Cornell University will be visited.

FOUR years ago an important gift was bestowed on the University of Paris, but it seems to have attracted little public attention. The Minister of War having decided to abandon three of the bastions constructed at the south frontier of the Parisian fortifications, generously placed them at the disposal of the University of Paris for the purpose of higher education. Each bastion represents about 3000 square metres of site. The council of the University determined to devote two of these to extending the facilities of the Faculty of Science and the third to the use of the Faculty of Medicine, and on these areas buildings suitable for the new installations required in connection with the above Faculties, which in the absence of a site cannot be erected in the centre of Paris, were to have been built. But though, with the intention of proceeding to erect the necessary buildings, the gift of the Minister of War was immediately accepted by the Faculties of Science and Medicine, funds voted for the purpose, and designs prepared by the architect of the Sorbonne, nothing has yet been done in the way of building. This delay is, it appears, the result of numerous objections which have been raised in different quarters. In a recent number of the *Revue générale des Sciences* these objections are answered in detail, and it is shown that it would be a great pity from the point of view of facilities for scientific research if the unhoped for chance of fine large laboratories on the outskirts of Paris was, even provisionally, abandoned.

SOCIETIES AND ACADEMIES.

CAMBRIDGE.

Philosophical Society, May 5.—Dr. J. Larmor, vice-president, in the chair.—Regeneration in *Samia ailanthus*, by Mr. H. H. Brindley. With the object of ascertaining the degree of regeneration and how far it is uniform in the imago after injury to the larva in particular stadia and to particular extents, amputation experiments were made on the legs of this moth in larva. Owing to the large number of cases in which the imago did not emerge the results were somewhat limited, but sufficient instances were observed to suggest (*a*) that compared with Orthoptera and other non-pupating forms the results of injury are very variable, (*b*) that the earlier the instar injured the imaginal limb more closely approaches the normal in form and size, (*c*) there is no uniformity in the presence of the terminal claw apparatus without regard to the number of limb joints such as has been observed in Arachnids, Myriapods and several orders of non-pupating insects, and (*d*) that the length of time spent in pupa and the degree of injury to the larval limb seem not to influence the degree of regeneration. As regards (*b*) the results are in general accord with those of Newport on Vanessa and Chapman on Liparis, though not as regards (*c*) with Newport. The experimental evidence obtained also seems to confirm Gonin's opinion, based on anatomical