Heredity **83** (1999) 327–336 *Received 6 April 1999, accepted 21 May 1999*

Power to detect QTL in a free-living polygynous population

J. SLATE*†, J. M. PEMBERTON† & P. M. VISSCHER‡

†Institute of Cell, Animal and Population Biology, University of Edinburgh, West Mains Road, Edinburgh, EH9 3JT and ‡Institute of Ecology and Resource Management, University of Edinburgh, West Mains Road, Edinburgh EH9 3JG, U.K.

Evolutionary biologists attempting to detect quantitative trait loci (QTL) in natural populations have thus far had to carry out some kind of cross with their study organism. Such techniques often increase the probability of detecting linkage, but are impossible or undesirable in many populations. A potential way of overcoming this problem is to carry out linkage studies in large complex pedigrees. In this paper we contrast the power to detect linkage in a complex pedigree of red deer (*Cervus elaphus*) with that of the widely used half-sib design. When a QTL of magnitude 1 phenotypic standard deviation is segregating and completely linked to a marker, the extended pedigree has power of 0.67, whereas the half-sib design has power of just 0.21. We conclude that detecting QTL may be possible in intensively studied natural populations, provided detailed life history data and good pedigree information are available.

Keywords: *Cervus elaphus*, genetic mapping, major gene, natural population, pedigree, red deer.

Introduction

Evolutionary biologists have long been interested in genetic variation for fitness in natural populations. One unresolved issue is whether genetic variation for fitness and fitness components is caused by many polygenes of small effect, or whether genes of major effect can segregate despite natural selection (Barton & Turelli, 1989; Orr & Coyne, 1992). Recent attention has focused on the possibility of mapping genes for fitness in natural populations, given the advent of suitable markers, maps and statistical methodology (Mitchell-Olds, 1995). However, very few studies have, as yet, attempted to do this, and none has managed it in an unmanipulated population actually *in* the wild. The vast majority of linkage mapping projects have taken place in humans, laboratory model organisms, e.g. *Drosophila* (Shrimpton & Robertson, 1988), mouse (Keightley & Bulfield, 1993) or domestic species, e.g. cattle (Georges *et al*., 1995) and tomato (Paterson *et al*., 1988).

A few mapping programmes have been carried out in 'natural' populations of plants, most notably within the genus *Mimulus* (e.g. Bradshaw *et al*., 1995; Lin & Ritland, 1997). However, these studies have taken place within artificial crosses, a technique which elevates the amount of phenotypic and additive genetic variation segregating within the cross, relative to the situation in the wild. Furthermore, selective genotyping (Darvasi & Soller, 1992) may have been employed. Both of these techniques improve the chances of detecting QTL but may be impossible in a large number of natural populations. Selective genotyping is applicable only when a single trait (or several phenotypically highly correlated traits) is of interest, whereas in many populations it is neither desirable nor possible to perform crosses. In addition QTL segregating within a cross do not necessarily segregate in a single wild population.

Where it is not possible to create specific crosses, researchers might turn to an alternative experimental design: the use of complex, extended pedigrees. To carry out a QTL mapping programme without manipulating a pedigree is analogous to complex disease mapping in human populations, although considerably more difficult. To obtain a pedigree of a natural population is nontrivial. Additionally, genetic maps of wild species will not be as dense (with the possible exception of wild mouse populations) as the human map. The biggest problem for QTL mappers of natural populations is a lack of power in the pedigrees available (if any) to actually detect linkage.

Considerable attention has been given in the animal breeding literature to the relative power of half-sib designs and more complicated family structures, in detecting QTL (Weller *et al*., 1990; van der Beek *et al*.,

*Correspondence. E-mail: j.slate@ed.ac.uk

© 1999 The Genetical Society of Great Britain.

1995). Weller *et al.* (1990) examined the power to detect QTL for the half-sib (or daughter) design and compared this to a three-generation granddaughter design. In the daughter design each sire has a number of daughters by different dams. All animals are genotyped and progeny have recorded trait values. The alternative granddaughter design was developed with dairy cattle in mind: it requires sires to have a medium to large number of sons, who in turn sire a large number of daughters. The sons of the sires are genotyped and trait values of their daughters are recorded. Breeding values of sons are accurately estimated by taking daughter phenotypic means. Weller *et al.* (1990) conclude that although not a particularly complex pedigree, the granddaughter design was a more powerful method than the half-sib design in detecting QTL. Additionally, less genotyping is required in obtaining this enhanced power. Georges *et al.* (1995) successfully used this design to detect milk production QTL in dairy cattle.

Human geneticists have also focused on the relative merits of extended pedigrees vs. nuclear families for detecting linkage. The recent Genetics Analysis Workshop 10 (GAW10) set a challenge to a number of groups to detect QTL for an oligogenic trait segregating in two simulated data sets, one containing nuclear families and the other an extended pedigree (Wijsman & Amos, 1997). The number of phenotypes and genotypes was equal for both data sets. Those analyses that used the extended data set were generally more successful in detecting the simulated disease loci, estimated QTL location more accurately and detected fewer false positives. Two properties of extended pedigrees lead to this increased power. First, there are more meioses in the extended pedigree than the nuclear family design for the same number of genotypes. Secondly, marker phase is estimated more accurately over several generations than over one. Recent statistical advances have enabled geneticists to use information from extended pedigrees rather than their constituent nuclear families or sibships (Almasy & Blangero, 1998). Approaches such as these may enable evolutionary biologists to search for QTL without performing crosses within their study population. However, utilizing whole pedigrees does have disadvantages. Analyses can be computationally demanding, and statistical techniques familiar to those using simple crosses, such as least squares, cannot be performed.

In this paper we investigate, by simulation, the power of QTL analyses in a free-living red deer population, using a large complex pedigree or the series of half-sibships that comprise it. The red deer on Rum, Inner Hebrides, Scotland have been intensively studied for over 25 years, with life history data collected for over 2000 deer. The deer genome is now reasonably well mapped and includes over 600 markers of which 130 are microsatellites (Tate, 1997). In principle it is possible to screen the Rum red deer for a large number of mapped, polymorphic markers and carry out a search for fitness-related QTL. The main purpose of this paper is to investigate three questions about the power to detect QTL in this population. First, do small half-sibships contribute towards power? Secondly, do least squares and likelihood approaches give similar estimates of power for the half-sib design? Thirdly, the main aim of the paper, do the complex pedigree and the half-sib design give similar estimates of power when using the likelihood approach? If the complex pedigree gives greater power than the half-sib design then this approach may be useful in attempting to map QTL in the wild.

Methods

The study population

The deer in the north block of Rum have been intensively studied since 1971 and are one of the best characterized free-living mammal populations in the world. For a review of the first decade of the study and a description of the study site see Clutton-Brock *et al.* (1982). Since 1982 over 80% of new-born calves have been sampled for genetic purposes. Mother–offspring pairs in the population are determined by observation in the field. Typing of over 1100 individuals for nine mapped microsatellite loci and three allozymes has revealed no mis-assignments of maternity (Marshall *et al.*, 1998). Paternity was assigned using CERVUS (Marshall *et al.*, 1998), a program for inferring paternity in unmanaged populations at any required statistical confidence. CERVUS uses population characteristics including allele frequencies to calculate, by simulation, likelihood thresholds for determining paternity at the desired confidence. 875 calves born between 1982 and 1996 were analysed of which 475 calves were assigned sires with 80% confidence and 203 with 95% confidence (Marshall *et al.*, 1998). The polygynous mating system of red deer results in large numbers of half-sibs, but relatively few full-sibs.

Pedigree used in simulation studies

The Rum pedigree was visualized using PEDVIEW (Kinghorn, 1994). Features such as large half-sibships and successful individuals were identified. One particular stag, MAXI, was investigated more fully for a number of reasons. First, MAXI was extremely successful, siring 21 calves at 95% confidence and a further 12 at 80% confidence, for most of whom we have life history data. Secondly, a number of MAXI's offspring were extremely

successful themselves (see Fig. 1) and to date MAXI has at least 416 known descendants since his birth in 1971. Thirdly, MAXI was an F_1 between a Rum hind and a mainland stag (Lincoln *et al.*, 1973) and so may have introduced novel additive genetic variation into the population. For the same reason marker heterozygosity may be higher within this specific pedigree. For the purposes of our simulations we have analysed the MAXI pedigree. DNA samples and life history data are available for all individuals used in our simulations. The 416 individuals are spread over six generations. In total there are 73 sibships ranging in size from two to 27. The alternative half-sib design with which we compared the MAXI pedigree was simply the composite half- and full-sibships within the larger pedigree. Breaking down the complex pedigree in this way violates the assumption that the nuclear families are independent, but analysis is simplified such that least squares methods can be employed.

Simple least-squares-based analysis of power

A quick method to estimate the power to detect QTL in the constituent half-sibships of the larger pedigree was

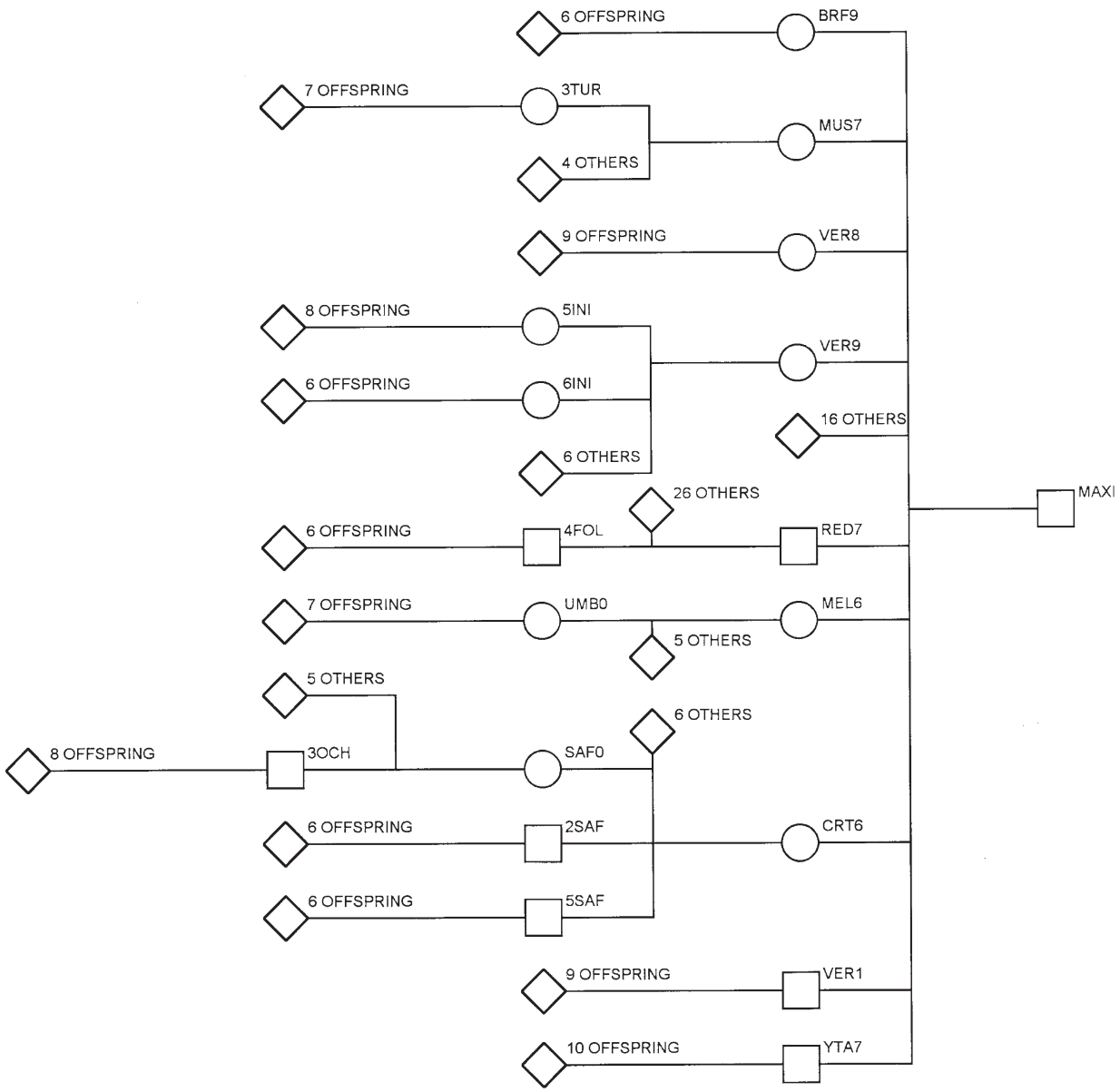

Fig. 1 Pedigree showing MAXI, and his most reproductively successful descendants. Squares represent males, circles females and diamonds five or more individuals.

developed by one of us (P.V.) using computer simulation. We used this 'Weller approach' to investigate whether small sibships contribute to power, and also to compare the power of this approach with a likelihood approach for a half-sib design. This analysis is an extension of that used by Weller *et al.* (1990) when evaluating the daughter design, but allows for sibships of unequal size. In the balanced half-sib design used by Weller *et al.* (1990), the distribution of the test statistic under both the null hypothesis (no QTL segregating) and the alternative hypothesis can be approximated by a central and a noncentral χ^2, respectively. With unequal family sizes, the test statistic under the alternative hypothesis is not obvious, and we therefore use the following approach.

For each replicated population the sum of squares attributable to the marker contrasts within sires was sampled by:

1 determining whether each sire is homozygous or heterozygous at the QTL, by sampling from a binomial distribution;
2 binning each progeny into one or other marker allele class (all sires are heterozygous for the marker), again by sampling from a binomial distribution;
3 sampling the means of each marker class from a normal distribution with the mean difference between the marker classes equal to the QTL effect. The squared difference between the means, standardized by the variance of the difference between the two means, is a draw from a noncentral χ^2 distribution. It was thus assumed that the within-sire variance was known (or estimated without error).

Summing this marker contrast sum of squares across all sires gives the test statistic. Power is calculated by determining the probability of this test statistic exceeding a central χ^2 of Type I error α, with degrees of freedom equal to the number of sires which have progeny in both marker classes.

Unlike Weller *et al.* (1990) we have investigated half-sibships of differing size, as will be the case for most natural populations. In addition, we have taken into account the finite sampling of progeny group sizes for each marker class. We have assumed that all sires are heterozygous for the marker allele and that there is no recombination between marker and trait loci. We used the following parameter values for simulations. The QTL was assumed to be biallelic, with each allele at frequency 0.5. QTL magnitude was varied in increments of 0.1 of a within-QTL genotype phenotypic standard deviation, so that the difference between the heterozygote and either homozygote was 0.5–1.0 SD. Polygenic heritability was 0.5. We examined the effect of using all sibships (two sibs or more) or those containing greater than three, four, or five sibs, on the power of detecting linkage. Ten thousand replications were performed throughout.

SIMLINK program

Although the Weller approach gives a rapid and accurate estimate of power within the half-sib design, it cannot be used to analyse more complex pedigrees. To perform power comparisons between the extended pedigree and the half-sib designs (the main purpose of this paper) we used the likelihood-based program SIMLINK (Boehnke, 1986; Ploughman & Boehnke, 1989). SIMLINK also enables investigation of the effects of marker heterozygosity and recombination on power. SIMLINK tests whether a segregating major gene can be detected when linked to a marker, compared to the null hypothesis of a major gene segregating but being unlinked. Note that SIMLINK and the Weller approach are performing subtly different statistical tests. The Weller approach tests for a QTL segregating against the null hypothesis of no QTL, whereas SIMLINK tests for a QTL linked to a marker, compared with a QTL segregating but unlinked to the marker. The implications of this difference are discussed. We compared the power to detect linkage in the extended pedigree and its constituent sibships, whilst also investigating the effect of QTL magnitude, marker heterozygosity and recombination between marker and QTL. One hundred replications were performed throughout.

SIMLINK parameters

1 QTL magnitude: this was as for the Weller approach.
2 Recombination fraction: the distance between marker and trait locus was set to 0, 10 or 20 cM.
3 Marker heterozygosity: the number of marker alleles was varied from two to nine with all alleles at equal frequency. This meant that marker heterozygosity varied from 0.5 to 0.89. Unlike the Weller approach, a marker heterozygosity of unity is impossible with SIMLINK. However, the parameter values used in SIMLINK are more realistic. In practice no single marker has a heterozygosity of unity.

Significance thresholds

The relationship between the χ^2-test of the Weller approach and the likelihood test of SIMLINK is complicated, but the same significance level for both is essential to make a comparison between the two approaches for a half-sib design. Baret *et al.* (1998) examined the relationship between the test statistics for the *F*-statistic (or its approximation by χ^2) and a likelihood ratio test, for

the half-sib design. They showed for the null hypothesis of no QTL segregating, that a likelihood ratio test (or LOD score) follows an approximate distribution of half times 0 and half times a χ^2 with d.f = 1. This can be approximated by using a χ^2 distribution with 1 d.f. and doubling the probability value. So, if SIMLINK is used to test the power of obtaining a LOD of 3.0 (corresponding to a probability of 0.0001) then to perform the equivalent test with the Weller approach a *P*-value of 0.00005 (half of 0.0001) should be used.

Results

Contribution of smaller sibships to power

We used the Weller approach to examine the effect of the smaller half-sibships on the power to detect linkage to a QTL (see Table 1). Of the 73 sibships within the MAXI pedigree, 31 of them only had two sibs and 17 just three sibs. Power was greatest when all half-sibships were used, but the contribution from the half-sibships with fewer than five progeny was small. In small sibships all offspring often inherit the same sire marker allele. In consequence the average number of informative sires will vary across replications of the simulation, and the Type 1 threshold will not be constant. As the smaller families contributed little power, all subsequent Weller simulations were performed with the 18 half-sibships containing five or more offspring. This meant that a single Type 1 threshold could be used (assuming that all 18 sires were informative; see Table 1), and comparisons between Weller *et al.*'s (1990) least squares approach and the likelihood method of SIMLINK could be made.

Comparison of the Weller and SIMLINK approaches for the half-sib design

Both methods were used to investigate the power of detecting linkage to a QTL for the constituent half-sib design. For a QTL of effect 0.5–1.0 phenotypic standard deviation, with no recombination between marker and trait loci, both methods yielded similar results (Table 2), although the Weller approach tended to give slightly higher power. This is perhaps unsurprising given that the Weller approach makes the assumption that all sires are heterozygous at the marker allele, whereas for our SIMLINK simulations we used a marker heterozygosity of 0.89 (see Methods). The maximum discrepancy in power between the two programs was 0.08.

Table 1 Effect of small half-sibships on power to detect QTL using a 'Weller approach' half-sib design

Minimum sibship size	Number of sibships	Mean number of informative sires	Average Type 1 threshold (χ^2 units)	Average test statistic (χ^2 units)	Power
2	73	52.0	69.7	84.5	0.81
3	42	36.5	51.5	64.5	0.80
4	25	23.1	36.0	46.7	0.78
5	18	17.5	28.3	37.7	0.76

Heritability was set to 0.5, QTL effect was 1.0 phenotypic standard deviation, and a significance threshold of 0.05 was used. Ten thousand replications were performed. The number of informative sires is less than the actual number of sires because all offspring in small sibships can inherit the same sire marker allele.

Table 2 Comparison of the Weller approach and a LOD score approach (SIMLINK) for power of the half-sib design

QTL effect (SD)	0.5 (W)	0.5 (S)	1.0 (W)	1.0 (S)	2.0 (W)	2.0 (S)	3.0 (W)	3.0 (S)
0.5	0.22	0.22	0.10	0.02	0.01	0.00	0.00	0.00
0.6	0.33	0.30	0.15	0.14	0.03	0.01	0.00	0.00
0.7	0.44	0.38	0.25	0.23	0.06	0.02	0.01	0.01
0.8	0.56	0.49	0.35	0.31	0.10	0.10	0.03	0.01
0.9	0.68	0.62	0.49	0.42	0.18	0.18	0.07	0.03
1.0	0.78	0.72	0.60	0.52	0.30	0.27	0.14	0.10

Columns refer to power of obtaining LOD scores in the range 0.5–3.0 for the Weller (W) and SIMLINK (S) approaches. QTL effect ranged from 0.5 to 1.0 of a phenotypic standard deviation. Marker heterozygosity was 1.00 for the Weller approach and 0.89 for SIMLINK. Heritability was set to 0.5 in the Weller approach. Ten thousand replicates were performed for the Weller method and 100 for SIMLINK. The Weller approach used only sibships with five or more offspring.

Table 3 Comparison of power for an extended pedigree and a half-sib design using SIMLINK. Mean LOD score and power of obtaining LOD score greater than 0.5–3.0 for the two designs

		Extended pedigree					Half-sib design				
Recombination fraction	QTL effect (SD)	Mean LOD (±SE)	Power >0.5	Power >1.0	Power >2.0	Power >3.0	Mean LOD (± SE)	Power >0.5	Power >1.0	Power >2.0	Power >3.0
0	0.5	0.676 (0.069)	0.49	0.24	0.06	0.02	0.246 (0.033)	0.22	0.02	0.00	0.00
	0.6	1.069 (0.093)	0.67	0.41	0.18	0.04	0.377 (0.047)	0.30	0.14	0.01	0.00
	0.7	1.557 (0.122)	0.78	0.56	0.32	0.17	0.551 (0.063)	0.38	0.23	0.02	0.01
	0.8	2.126 (0.150)	0.85	0.75	0.46	0.26	0.769 (0.080)	0.49	0.31	0.10	0.01
	0.9	2.769 (0.177)	0.92	0.82	0.60	0.40	1.033 (0.097)	0.62	0.42	0.18	0.03
	1.0	3.475 (0.203)	0.97	0.90	0.74	0.51	1.346 (0.115)	0.72	0.52	0.27	0.10
10	0.5	0.403 (0.049)	0.34	0.10	0.01	0.00	0.183 (0.028)	0.11	0.03	0.00	0.00
	0.6	0.608 (0.067)	0.43	0.22	0.06	0.01	0.266 (0.039)	0.22	0.05	0.00	0.00
	0.7	0.860 (0.085)	0.55	0.38	0.09	0.03	0.366 (0.050)	0.25	0.13	0.02	0.00
	0.8	1.152 (0.105)	0.63	0.44	0.18	0.07	0.485 (0.062)	0.31	0.17	0.03	0.00
	0.9	1.485 (0.124)	0.77	0.56	0.26	0.11	0.623 (0.073)	0.42	0.19	0.05	0.03
	1.0	1.850 (0.143)	0.85	0.71	0.39	0.19	0.779 (0.084)	0.53	0.27	0.10	0.04
20	0.5	0.239 (0.039)	0.19	0.08	0.00	0.00	0.141 (0.023)	0.05	0.02	0.00	0.00
	0.6	0.334 (0.050)	0.25	0.11	0.01	0.00	0.191 (0.030)	0.12	0.03	0.00	0.00
	0.7	0.448 (0.061)	0.26	0.19	0.05	0.00	0.244 (0.037)	0.20	0.04	0.00	0.00
	0.8	0.577 (0.072)	0.37	0.19	0.08	0.00	0.299 (0.044)	0.26	0.09	0.01	0.00
	0.9	0.729 (0.082)	0.43	0.25	0.08	0.03	0.355 (0.050)	0.27	0.10	0.02	0.00
	1.0	0.895 (0.092)	0.53	0.35	0.14	0.03	0.415 (0.056)	0.29	0.16	0.03	0.00

Marker heterozygosity was set to 0.89, recombination fraction between marker and QTL was set to 0, 10 or 20 cM, and QTL effect was 0.5–1.0 phenotypic standard deviations. One hundred replications performed throughout.

Comparison of mean LOD score and power between an extended pedigree and its constituent sibships

Table 3 compares the results obtained from SIMLINK using the extended pedigree and using the constituent half-sibships analysed separately. Mean LOD score and power are compared when recombination between marker and trait locus is set to 0, 10 or 20 cM. Figure 2 illustrates the effect of QTL magnitude on mean LOD for all six scenarios considered (extended and half-sib pedigrees at three different recombination fractions). The mean LOD score was always greater for the extended pedigree than for the equivalent half-sib design. The relative difference between the two designs was greater when recombination fraction was lower. At 0 cM the extended pedigree mean LOD was 2.5–3.0 times greater than for the half-sib design, whereas at 20 cM the ratio was only 1.5–2.0.

The relationship between pedigree design and power was similar to that of pedigree design and mean LOD score. Figure 3 illustrates the power of obtaining LOD scores in the range 0.5–3.0 for some of the models tested. When there was no recombination between the marker and the QTL, the extended pedigree had more than double the power of the half-sib design to obtain a LOD score of 2.0 and above, regardless of QTL effect. Power rapidly decreased with increasing recombination fraction between marker and QTL for both designs.

Effect of marker heterozygosity on mean LOD score and power

We also examined the effect of marker heterozygosity on mean LOD score and power, for both extended and half-sib designs (Table 4). When marker heterozygosity was reduced from 0.89 to 0.50, mean LOD score for both designs was more than halved. However, the extended pedigree still had a mean LOD score more than 2.5 times greater than that of the half-sib design. At the lower marker heterozygosity (0.50), the power to obtain a LOD score of 3.0 had decreased from the original value of 0.51 to just 0.10 for the extended pedigree.

Discussion

We have demonstrated that the probability of detecting QTL in an unmanaged free-living population of red deer is greatly increased if an extended pedigree rather than a simple half-sib design is used. This is the first time that complex pedigrees have been considered for mapping QTL in wild populations and the results are encouraging.

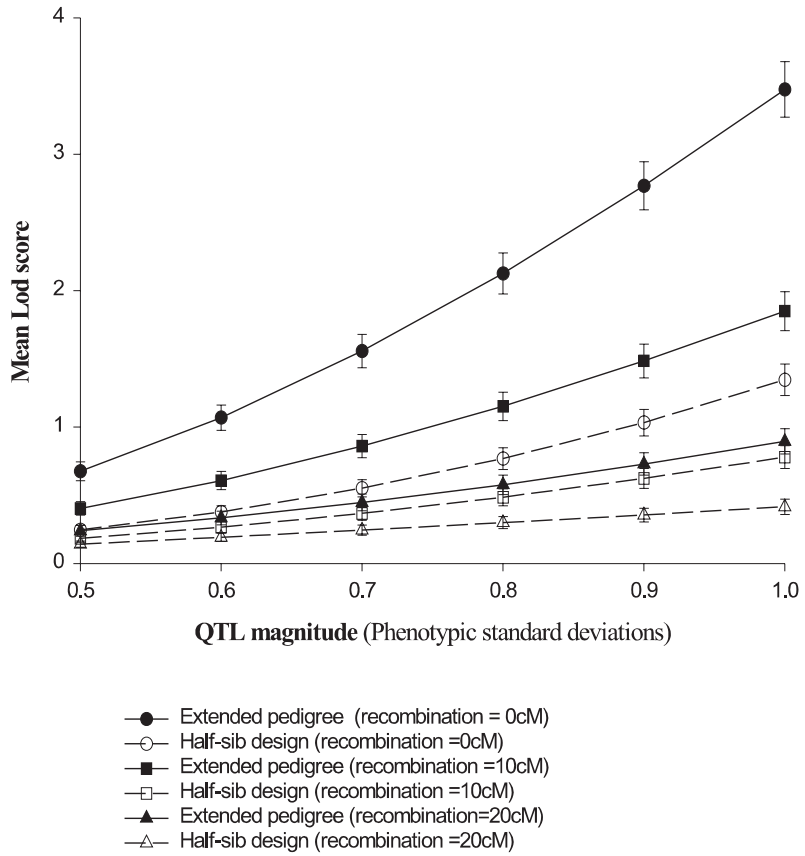

Fig. 2 Plot showing effect of QTL magnitude on mean LOD score for extended pedigree and half-sib design. Marker heterozygosity = 0.89. One hundred replicates performed.

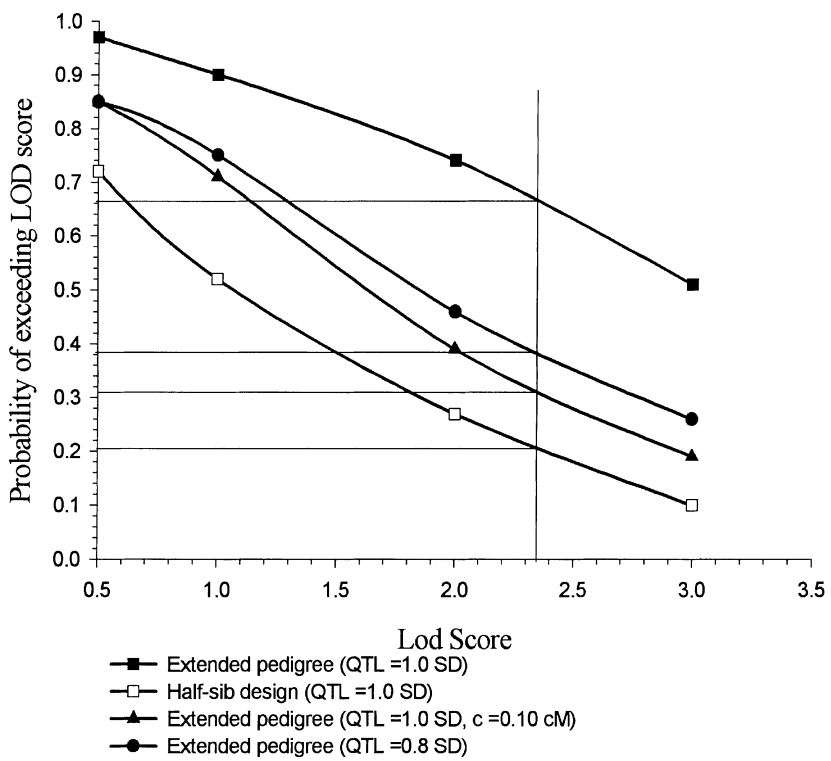

Fig. 3 Power curves for extended pedigree and half-sib designs. Curves show the power of obtaining LOD scores in the range 0.5–3.0. The vertical line represents a LOD score of 2.34, equivalent to a genome-wide significance level of 0.05 when 100 markers are screened (see Discussion). When a QTL of 1.0 SD is segregating and there is no recombination between marker and QTL, the extended pedigree has a power of 0.67 whereas the half-sib design has a power of 0.21. The extended pedigree has a power of 0.31 when recombination is 10 cM. For a QTL of effect 0.8 SD, and no recombination, the extended pedigree has power 0.38.

Table 4 Effect of marker heterozygosity on mean LOD score and power

		Extended pedigree					Half-sib design				
Marker alleles	Marker heterozygosity	Mean LOD (± SE)	Power > 0.5	Power > 1.0	Power > 2.0	Power > 3.0	Mean LOD (± SE)	Power > 0.5	Power > 1.0	Power > 2.0	Power > 3.0
2	0.500	1.355 (0.110)	0.76	0.51	0.23	0.10	0.518 (0.065)	0.33	0.15	0.05	0.01
3	0.667	2.062 (0.150)	0.85	0.73	0.44	0.25	0.838 (0.081)	0.58	0.31	0.14	0.01
4	0.750	2.565 (0.172)	0.93	0.79	0.57	0.32	0.977 (0.088)	0.62	0.41	0.14	0.03
5	0.800	2.971 (0.181)	0.91	0.87	0.69	0.43	1.158 (0.106)	0.68	0.45	0.16	0.08
6	0.833	3.183 (0.186)	0.97	0.88	0.67	0.50	1.246 (0.107)	0.71	0.49	0.23	0.09
7	0.857	3.230 (0.186)	0.95	0.90	0.73	0.47	1.302 (0.113)	0.72	0.49	0.23	0.09
8	0.875	3.336 (0.195)	0.95	0.90	0.73	0.51	1.322 (0.113)	0.73	0.49	0.24	0.10
9	0.889	3.475 (0.203)	0.97	0.90	0.74	0.51	1.346 (0.115)	0.72	0.52	0.27	0.10

Mean LOD score and power of achieving LOD score greater than 0.5–3.0 for an extended pedigree and a half-sib design. QTL effect was 1.0 SD, recombination between marker and QTL was 0 cM and 100 replicates were performed.

A number of field studies could now produce pedigrees several generations deep, and similar to the one we use in our analysis.

Why does the extended pedigree yield greater power than the half-sib design? The extended pedigree uses genotype and phenotype information on all individuals, and by tracing marker alleles down the pedigree, calculates the likelihood of a major gene segregating. In other words, both between- and within-family information is considered. In contrast, the half-sib design uses only within-family information.

With a real QTL mapping data set, one would probably perform a test that compares a model of QTL and background polygenic effect against a model which had only a polygenic effect. Our comparison of a half-sib design and an extended pedigree used a model of QTL linked vs. QTL present but unlinked. Our own data, and also those of Le Roy & Elsen (1995) suggest that the former test may give a slightly higher test statistic than the SIMLINK comparison. In our half-sib simulations the Weller approach gave marginally higher power than SIMLINK, although this may be caused by the slightly higher marker heterozygosity for the Weller approach. Le Roy & Elsen (1995) also demonstrate that a LOD score approach (testing QTL linked vs. QTL unlinked) gives lower power relative to a Weller approach, particularly for a three-generation design compared to a half-sib design. This would suggest that our test statistic for the extended pedigree may be downwardly biased, making our comparison between the extended pedigree and half-sib design conservative. It should also be pointed out that our approach does not account for any polygenic variation that may be segregating. However, there is no evidence that ignoring a polygenic effect inflates our test statistic. Knott & Haley (1992) simulated a polygenic component in a full-sib design and showed that a QTL linked vs. QTL unlinked test gave a *lower* test statistic than one where polygenic effect was fitted (QTL linked + polygenic component vs. QTL unlinked + polygenic component). Again this suggests that our test may be conservative.

A contentious area of QTL mapping is that of significance thresholds. Lander & Kruglyak (1995) discussed the criteria that should be used for assigning linkage. A common problem is that when carrying out a genome-wide scan for QTL, multiple testing leads to false assignation of linkage because of Type I error. However, imposing too strict a value for significance may wrongly reject any suggestions of linkage that are found (Type II error). Traditionally a LOD score of 3 has been used to assign linkage. However, Lander & Kruglyak (1995) suggest a different approach: the use of a genome-wide significance level to find what they term 'significant linkage'. This is defined as statistical evidence expected 0.05 times in a genome-wide scan. If one were to carry out a genome-wide scan using 100 markers (a realistic number of markers for a natural population screening), an experiment-wide error rate of 0.05 could be approximated using a Bonferroni correction so that

$$\alpha' = 1 \quad (1 \quad 0.05)^{1/100} = 5.13 \times 10^{\ 4}.$$

Using the approach of Baret *et al.* (1998) this significance level corresponds to a LOD score of 2.34. In other words, rather than use a LOD score of 3.0 to assign linkage, a LOD score of 2.34 could be used for an experiment-wide significance level of 0.05. For the MAXI pedigree this equates to a power of about 0.67 (rather than 0.51) when a QTL of effect 1.0 SD is segregating, and there is no linkage between marker and QTL (see Fig. 3).

Although the power to detect QTL is high only in a somewhat idealized situation (highly polymorphic markers, QTL of very large effect, and low recombination

fraction between marker and QTL), further considerations may increase this power. In a real mapping study researchers may have prior information on environmental factors influencing the trait of interest. Controlling for these variables will serve to increase the proportion of the residual variation explained by the QTL. In other words, the heritability of the trait determined by the QTL will increase, as will the power to detect the QTL. Mapping projects in wild populations may also be able to draw on previous work carried out in closely related laboratory or farmed species where QTL for a trait of interest have been identified. If one knew the likely location of a QTL, then extra markers could be screened in that chromosomal region, hence reducing the recombination fraction between the QTL and marker(s). Alternatively only markers linked tightly to the candidate region could be typed and less stringent significance thresholds used. Again, this would increase the power to detect QTL. There is increasing evidence from the plant breeding literature that QTL affecting particular traits are found in syntenic genomic regions across species (Kearsey & Farquhar, 1998).

In our simulations we have performed linkage analysis only with single-point markers. Interval mapping and multipoint analysis would reduce much of the loss of power observed when recombination occurs between marker and QTL (Lander & Botstein, 1989; Knott *et al.*, 1996). For example, when a QTL of effect 1.0 SD is segregating and there is no recombination, the power for a mean LOD > 3.0 is 0.51 in the extended pedigree. At 10 cM the power is only 0.19, and at 20 cM just 0.03. Interval mapping would partially alleviate this problem, the effect of which is most noticeable when one has markers spaced at wide intervals (Fulker & Cardon, 1994), as will be the case in most studies of natural populations. Interval mapping has the additional advantage over single-point mapping that other QTL parameters such as magnitude and location can be estimated (Lander & Botstein, 1989). Most interval mapping procedures developed thus far are applicable to sib-pair (Lander & Botstein, 1989; Fulker & Cardon, 1994) or half-sib (Haley & Knott, 1992; Knott *et al.*, 1996) families. However, our simulations suggest that QTL detection in unmanipulated natural populations may be possible only if whole, complex pedigrees can be analysed. A recent study (Almasy & Blangero, 1998) described a method in which large complex pedigrees can be analysed by multipoint linkage. The number of alleles shared identically by descent (IBD) at marker loci is used to estimate genes IBD at various points along a chromosome for all relative pairs within the pedigree. Variance-component maximum likelihood linkage analysis is then performed on the overall pedigree to indicate the presence of a QTL. As new statistical approaches like these are developed, QTL mapping in natural populations will become a possibility.

As expected, marker heterozygosity had a significant impact on ability to detect QTL. For both the extended and the flat pedigrees, a heterozygosity of 0.8 gave about twice the LOD score as one of 0.5. Microsatellite loci typically have heterozygosity values in the range 0.5–0.8, although this varies among species and populations. In species with a very dense map, such as the mouse, it may be possible to use highly variable markers exclusively.

In summary, we conclude that QTL detection in natural populations is possible, but unlikely unless loci of very large effect are segregating. However, if this is the case, those studies with reasonable sample sizes will benefit greatly from being pedigreed for several generations. Mapping of QTL may be possible with pedigrees of well under 1000 individuals. We look forward to the development and application of new, sophisticated statistical software, and remain cautiously optimistic that mapping programmes such as these will be realized in the next few years.

Acknowledgements

We thank all members of the Rum red deer project, in particular T. H. Clutton-Brock, S. D. Albon, F. E. Guinness and the various field assistants who have collected individual specific life-history data. We also thank the numerous volunteers who have helped them over the duration of the project. We thank SNH and its predecessor NCC for permission to work on Rum. The long-term study has been funded by NERC and BBSRC. Chris Haley, Bill Hill, Marg Mackinnon, Dave Coltman and an anonymous referee made helpful comments on earlier versions of the manuscript. J.S. is funded by a BBSRC postgraduate studentship.

References

ALMASY, L. AND BLANGERO, J. 1998. Multipoint quantitative-trait linkage analysis in general pedigrees. *Am. J. Hum. Genet.*, **62**, 1198–1211.

BARET, P. V., KNOTT, S. A. AND VISSCHER, P. M. 1998. On the use of linear regression and maximum likelihood for QTL mapping in half-sib designs. *Genet. Res.*, **72**, 149–158.

BARTON, N. H. AND TURELLI, M. 1989. Evolutionary quantitative genetics: how little do we know? *Ann. Rev. Genet.*, **23**, 337–370.

BOEHNKE, M. 1986. Estimating the power of a proposed linkage study: a practical computer simulation approach. *Am. J. Hum. Genet.*, **39**, 513–527.

BRADSHAW, H. D., JR, WILBERT, S. M., OTTO, K. G. AND SCHEMSKE, D. W. 1995. Genetic mapping of floral traits associated with reproductive isolation in monkeyflowers (*Mimulus*). *Nature*, **376**, 762–765.

CLUTTON-BROCK, T. H., GUINNESS, F. E. AND ALBON, S. D. 1982. *Red Deer: Behaviour and Ecology of Two Sexes*. Edinburgh University Press, Edinburgh.

DARVASI, A. AND SOLLER, M. 1992. Selective genotyping for determination of linkage between a marker locus and a quantitative trait locus. *Theor. Appl. Genet.*, **85**, 353–359.

FULKER, D. W. AND CARDON, L. R. 1994. A sib-pair approach to interval mapping of quantitative trait loci. *Am. J. Hum. Genet.*, **54**, 1092–1103.

GEORGES, M., NIELSEN, D., MACKINNON, M., MISHRA, A., OKIMOTO, R., PASQUINO, A. T. *ET AL.* 1995. Mapping quantitative trait loci controlling milk production in dairy cattle by exploiting progeny testing. *Genetics*, **139**, 907–920.

HALEY, C. S. AND KNOTT, S. A. 1992. A simple regression method for mapping quantitative trait loci in line crosses using flanking markers. *Heredity*, **69**, 315–324.

KEARSEY, M. J. AND FARQUHAR, A. G. L. 1998. QTL analysis in plants; where are we now? *Heredity*, **80**, 137–142.

KEIGHTLEY, P. D. AND BULFIELD, G. 1993. Detection of quantitative trait loci from frequency changes of marker alleles under selection. *Genet. Res.*, **62**, 195–203.

KINGHORN, B. P. 1994. Pedigree Viewer – a graphical utility for browsing pedigreed data sets. In: Smith, C., Gavora, J. S., Benkel, B., Chesuais, J., Fairfull, W. and Gibson, J. P. (eds) *5th World Congress on Genetics Applied to Livestock Production*, pp. 85–86. University of Guelph, Canada.

KNOTT, S. A. AND HALEY, C. S. 1992. Maximum likelihood mapping of quantitative trait loci using full-sib families. *Genetics*, **132**, 1211–1222.

KNOTT, S. A., ELSEN, J. M. AND HALEY, C. S. 1996. Methods for multiple-marker mapping of quantitative trait loci in half-sib populations. *Theor. Appl. Genet.*, **93**, 71–80.

LANDER, E. S. AND BOTSTEIN, D. 1989. Mapping Mendelian factors underlying quantitative traits using RFLP linkage maps. *Genetics*, **121**, 185–199.

LANDER, E. AND KRUGLYAK, L. 1995. Genetic dissection of complex traits: guidelines for interpreting and reporting linkage results. *Nature Genet*, **11**, 241–247.

LE ROY, P. AND ELSEN, J. M. 1995. Numerical comparison between powers of maximum likelihood and analysis of variance methods for QTL detection in progeny test designs: the case of monogenic inheritance. *Theor. Appl. Genet.*, **90**, 65–72.

LIN, J.-Z. AND RITLAND, K. 1997. Quantitative trait loci differentiating the outbreeding *Mimulus guttatus* from the inbreeding *M. platycalyx*. *Genetics*, **146**, 1115–1121.

LINCOLN, G. A., GUINNESS, F. E. AND FLETCHER, T. J. 1973. History of a hummel – Part 3. Sons with antlers. *Deer*, **3**, 26–31.

MARSHALL, T. C., SLATE, J., KRUUK, L. E. B. AND PEMBERTON, J. M. 1998. Statistical confidence for likelihood-based paternity inference in natural populations. *Mol. Ecol.*, **7**, 639–655.

MITCHELL-OLDS, T. 1995. The molecular basis of quantitative genetic variation in natural populations. *Trends Ecol. Evol.*, **10**, 324–328.

ORR, H. A. AND COYNE, J. A. 1992. The genetics of adaptation: a reassessment. *Am. Nat.*, **140**, 725–742.

PATERSON, A. H., LANDER, E. S., HEWITT, J. D., PETERSON, S., LINCOLN, S. E. AND TANKSLEY, S. D. 1988. Resolution of quantitative traits into Mendelian factors by using a complete linkage map of restriction fragment length polymorphisms. *Nature*, **335**, 721–726.

PLOUGHMAN, L. M. AND BOEHNKE, M. 1989. Estimating the power of a proposed linkage study for a complex genetic trait. *Am. J. Hum. Genet.*, **44**, 543–551.

SHRIMPTON, A. E. AND ROBERTSON, A. 1988. The isolation of polygenic factors controlling bristle score in *Drosophila melanogaster*. II. Distribution of third chromosome bristle effects within chromosome sections. *Genetics*, **118**, 445–459.

TATE, M. L. 1997. *Evolution of Ruminant Chromosomes*. Ph.D. Thesis, University of Otago, New Zealand.

VAN DER BEEK, S., VAN ARENDONK, J. A. M. AND GROEN, A. F. 1995. Power of two- and three-generation QTL mapping experiments in an outbred population containing full-sib or half-sib families. *Theor. Appl. Genet.*, **91**, 1115–1124.

WELLER, J. I., KASHI, Y. AND SOLLER, M. 1990. Power of daughter and granddaughter designs for determining linkage between marker loci and quantitative trait loci in dairy cattle. *J. Dairy Sci.*, **73**, 2525–2537.

WIJSMAN, E. M. AND AMOS, C. I. 1997. Genetic analysis of simulated oligogenic traits in nuclear and extended pedigrees: summary of GAW10 contributions. *Genet. Epidemiol.*, **14**, 719–735.