Heredity **83** (1999) 196–205 *Received 8 May 1998, accepted 31 March 1999*

Phylogeographical evidence of gene flow among Common Crossbill (*Loxia curvirostra*, Aves, Fringillidae) populations at the continental level

SOPHIE QUESTIAU*†, LUDOVIC GIELLY†, MICHEL CLOUET‡ & PIERRE TABERLET†

†Laboratoire de Biologie des Populations d'Altitude (CNRS UMR 5553), Université Joseph Fourier, BP 53, F-38041 Grenoble cedex 9, France and ‡AROMP, Muséum d'Histoire Naturelle, 35 allée Jules Guesde, F-31000 Toulouse, France

Common Crossbill subspecies have been described according to morphological traits, vocalizations and geographical distribution. In this study, we have tried to determine whether the subspecies correspond to clear-cut mitochondrial DNA lineages, by sequencing 717 bp of the control region from individuals taken at several sampling locations in North America and the Western Palaearctic. We find 22 haplotypes from the 37 sampled individuals with a mean divergence of 0.0118 ± 0.0069 (mean ± SD). We find a mixing of the mitochondrial haplotypes at the continental level among the different types or subspecies previously described. Morphological differentiation (in bill size and shape essentially) shows the possibility of rapid local adaptation to fluctuating resources (coniferous seeds), without necessarily promoting the development of reproductive barriers between morphs.

Keywords: control region, intraspecific phylogeography, *Loxia curvirostra*, mitochondrial DNA, selection, systematics.

Introduction

Intraspecific variation in animal species often results in the description and definition of distinct subspecies. Even if the meaning of this taxonomic level is poorly understood, the classification usually relies on an apparent geographical isolation of different morphotypes. In birds, many subspecies have been described according to morphometric measurements and plumage coloration (AOU, 1957; Vaurie, 1959). On the other hand, as some populations do not differ morphologically, they are sometimes described solely by differences in vocalizations, which are thought to promote assortative mating and, in turn, local genetic differentiation (Lougheed & Handford, 1992; Groth, 1993a).

The use of molecular data for studying the phylogenetic structure of taxa has recently led to the development of a new species concept that Cracraft (1983) has called the Phylogenetic Species Concept (PSC). Based on the study of the genealogical relationships between taxa, the taxonomic status of a taxon is related to its genetic uniqueness and whether or not it is monophyletic. Increasing levels of divergence are necessary for the recognition of higher taxonomic levels. However, the threshold for any taxonomic level is somewhat subjective. Thus the ongoing debate between advocates of the PSC and the Biological Species Concept has led to an integrated and less strict principle of genealogical concordance (Avise & Ball, 1990). Taken together, morphological, biological and phylogenetic data have to be in agreement in order to make a clear decision on the specific status of a group (Avise & Ball, 1990). At the intraspecific level, this method can be used in the same way for the definition of subspecies, when associated with the spatial distribution of lineages (phylogeography, Avise *et al.*, 1987). One might expect a clear-cut structuring of lineages among different morphotypes, possibly structured at the geographical scale. However, such a clear pattern is not always found. In fact, the study of intraspecific phylogeography of birds using mitochondrial DNA (mtDNA) has not revealed a single general case. Polytypic bird species are sometimes found to have a clear geographical structuring of their mitochondrial haplotypes, corresponding to the described subspecies, and corroborating their taxonomic position

*Correspondence. Present address: Laboratoire d'Evolution des Systèmes Naturels et Modifiés (CNRS UMR 6553), Campus de Beaulieu, Av. du Général Leclerc, F-35042 Rennes cedex, France. E-mail: sophie.questiau@univ-rennes1.fr

(category I *sensu* Avise *et al*., 1987; Shields & Wilson, 1987; Seutin *et al*., 1994), but sometimes they do not (category II *sensu* Avise *et al*., 1987; Ball *et al*., 1988). Conversely, birds that are weakly, if at all, divergent in morphology can be represented by several, sometimes distant, lineages (Taberlet *et al*., 1992; Helbig *et al*., 1993). Such contrasting results highlight this puzzling systematic issue.

The Common Crossbill (or Red Crossbill in America, *Loxia curvirostra*) is a cardueline finch that inhabits coniferous forests, where it feeds on the seeds from cones of different *Picea* or *Pinus* species, depending on the region. The Common Crossbill is an example of a controversial classification that has fluctuated widely according to the views of different authors over the past century (Knox, 1975; Groth, 1993a). In the Western Palaearctic, five subspecies have been described (Vaurie, 1959), essentially on the basis of their geographical distributions and differences in size. In North America, eight subspecies have been recognized (Griscom, 1937) and more recently eight types have been thought to be a complex of sibling species (Groth, 1993a). Common Crossbills show morphological variation (at the population level), mainly in the shape of the bill (Knox, 1976), which is considered to be an adaptive character (Lack, 1944; Benkman & Miller, 1996). However, most of the forms cannot be separated morphologically (Knox, 1976; Groth, 1993a; Clouet & Joachim, 1996), although some have been separated by differences in flight calls (Groth, 1993a,b). In both continents, southern populations are sedentary, because of coniferous crop stability (Senar *et al*., 1993). Northern populations may engage in large movements, depending upon the varying state of conifer seed production, which define the nomadic status of this bird. In some years, these movements result in irruptions of several hundred individuals that may stay for only one breeding season in the invasion area before returning to their origin. Alternatively, they may establish new, temporary or permanent, settlements (Newton, 1972). Although such invasions give the opportunity for a mixing between invaders and local populations, no case of interbreeding has been described, and it is thought that gene flow does not occur between the resident and immigrant birds (Knox, 1990; Groth, 1993a). This complex of different types, alternatively called subspecies or sibling species, highlights the difficulty in finding a strict and clear definition of a taxonomic rank. This is especially true when a combination of intermediate forms, large movements at the continental level and sympatry among the types dilutes the clear-cut geographical structure of morphologically differentiated populations.

Here we report a study of the sequence variation of a portion of the noncoding mtDNA control region in Common Crossbills collected from different populations in the Western Palaearctic and North America. We seek to determine whether the types or subspecies previously described constitute monophyletic groups. If, as is thought, the types have been reproductively isolated from each other for a long period of time, we would expect to find a clear phylogenetic structure in the mtDNA, with monophyletic groups corresponding to the expected subspecies.

Materials and methods

Samples

Feathers were plucked from 37 individuals of Common Crossbill that we consider to be unrelated and were preserved in 80% ethanol. Each individual was assigned to a subspecies or type according to its measurements, especially the bill depth and the flight call after releasing (Clouet & Joachim, 1996). As in Scotland, the two sympatric species (Common Crossbill and Scottish Crossbill) are very alike in their appearance. The Scottish samples used were those whose bill depth was small enough to call them *curvirostra* (bill depth < 10.4 mm). Samples and sampling locations (four localities in North America and seven in the Western Palaearctic) are described in Table 1. A tissue sample of an individual Two-barred Crossbill (*Loxia leucoptera*) was also used in this study.

DNA methods

DNA from a 3-mm piece of the base of one feather per sample was extracted using the QIAamp Tissue Kit (QIAGEN GmbH, Hilden, Germany) according to the manufacturer's handbook. After extraction, the DNA was diluted in 200 μL of Buffer AE supplied with the kit.

One segment of the mitochondrial DNA control region was amplified (717 bp) using the primers H1248 (defined in the $tRNA^{phe}$ gene) and L437 created for amplifying the control region in oscine birds (Tarr, 1995). Amplifications were performed in a final volume of 25 μL in $1 \times$ PCR Buffer (50 mM KCl, 10 mM Tris-HCl, pH 8.3), 100 μM for each dNTP, 2 mM $MgCl_2$, with 1 U of AmpliTaq Gold™ DNA Polymerase (Perkin Elmer Branckburg, NewJersey, U.S.A.) and 25 pmol of each primer. Two microlitres of the DNA extract were added to the PCR mix. The amplification was carried out as follows: one step of initial denaturation at 95°C for 10 min followed by 25 cycles of one denaturation step at 95°C for 30 s, primer annealing at 50°C for 30 s and primer extension at 72°C for 90 s in a PE9600 thermocycler (Perkin Elmer Cetus).

Table 1 Crossbill (*Loxia*) samples and their collection location. Their corresponding mtDNA haplotypes are given

Subspecies or types	Locality	Samples	mtDNA haplotypes
Western Palaearctic			
curvirostra	French Alps	Alp-01	A2
		Alp-02	E
		Alp-03	A1
		Alp-04	F
	Pyrénées Mountains, France	Pyr-01	A2
		Pyr-02	J
		Pyr-03	A2
	Ladoga Lake, Russia	Lad-01	O
		Lad-02	A1
		Lad-03	N
	Scotland	Sco-01	P
		Sco-02	Q
		Sco-03	R
		Sco-04	S
corsicana	Corsica, France	Cor-01	K
		Cor-02	L
		Cor-03	M
balearica	Majorca	Maj-01	D
		Maj-02	D
		Maj-03	D
poliogyna	Atlas Mountains, Marocco	Atl-01	A1
		Atl-02	A1
		Atl-03	A1
North America			
Type I	Olympic Peninsula, Washington	Was-01	C1
Type III	Olympic Peninsula, Washington	Was-02	I
Type II	Jemez Mountains, New Mexico	Mex-01	G
		Mex-02	H
		Mex-03	B1
		Mex-04	C1
		Mex-05	C2
Type V	Grand Mesa, Colorado	Col-01	C2
		Col-02	B2
		Col-03	B1
		Col-04	B1
		Col-05	B2
Endemic race?	South Hills, Idaho	Ida-01	B1
		Ida-02	B1

PCR products were purified on QiaQuick PCR columns (QIAGEN), according to the manufacturer's instructions. Sequencing was performed using the ABI PRISM™ Dye Terminator Cycle Sequencing Ready Reaction Kit (Perkin Elmer) in a 20-μL volume containing 20–40 ng of purified DNA, 4 pmol of primer, according to the manufacturer's instructions. Sequencing reactions underwent 25 cycles of 30 s at 96°C, 30 s at 50°C, and 4 min at 60°C on a PE9600 thermocycler. Following this step, excess dye terminators were removed by a spin-column purification. Sequencing reactions were electrophoresed for 7 h on an ABI PRISM™ 377 DNA sequencer (Perkin Elmer) in a 5% Long Ranger™ gel (FMC).

Data analysis

Multiple sequence alignments were obtained using the Clustal program implemented in the Sequence Navigator 1.0 software (Perkin Elmer). The distances (Kimura-2-parameters) were calculated using test version 4.0.0.d64 of PAUP* written by David L. Swofford. Insertion–deletion events (indels) were not taken into account in the calculation. One out of the two positions with indels is situated in a poly A and is therefore prone to vary rapidly, creating a biased signal. The second indel did not change the structure of any tree. A maximum likelihood tree with a molecular clock enforced was computed in PAUP* assuming a ratio TS/TV = 3 (TV = transversion, and TS = transition) and a site-to-site variation model that follows a gamma distribution divided into four categories and with shape parameter, $\alpha = 0.5$. The small value of α has been chosen, as we consider that mutational events are concentrated at a few sites with a moderate to high mutation rate (Swofford *et al.*, 1996). A neighbour-joining tree was also computed. As the neighbour-joining and the parsimony methods (data not shown) confirmed the major branching, bootstrap values for the major lineages were calculated for the consensus trees obtained after 1000 replications in the parsimony method and 2000 replications in the neighbour-joining method.

Results

A segment of 717 bp of the mitochondrial DNA control region was sequenced for 37 individuals of Common Crossbill plus one individual of Two-barred Crossbill used as the outgroup. We detected 30 variable nucleotide positions among all individuals of *L. curvirostra*: 28 positions with substitutions (20 sites with TS, seven with TV and one with both TS and TV), two with indel events. These variable positions revealed 22 different sequence types that we call 'haplotypes' from here on (Table 2). Three pairs of haplotypes (A1 & A2, B1 & B2, C1 & C2) differ only by a one-bp insertion. They have been associated (A = A1 + A2, B = B1 + B2, C = C1 + C2) for further analysis as indels were not taken into account. The mean distance between all haplotypes is 0.0118 ± 0.0069 (mean ± SD), with a maximum of 0.0301 between haplotype Q (from an individual from Scotland) and haplotype H (from an individual from New Mexico). The mean distance between the outgroup and the haplotypes is 0.0257 ± 0.0056, with a maximum of 0.0388. The geographical distribution of haplotypes is given in Fig. 1. Some haplotypes (e.g. A) are geographically widespread; others, such as the haplotype D in Majorca, are found in only one place. Figure 2 gives the distribution of pairwise distances between all pairs of individuals. The distribution is bimodal indicating a cluster of small distance values within lineages (see below) and larger distances between lineages. The highest distances (0.027–0.030) result from two closely similar individuals from Scotland (Sco-02 and Sco-03) which are very distant from the others with values close to the interspecific distances between *L. curvirostra* and *L. leucoptera*. Their placement in the neighbour-joining tree highlights the fact that they seem relatively isolated from the other lineages (Fig. 3b). However, this result is not striking in the maximum likelihood tree probably because of the evolution model used in the analysis (Fig. 3a). The maximum likelihood tree obtained using a constant rate of mutation through time revealed four major lineages (groups I to IV, Fig. 3). One lineage (group IV) contains the haplotypes found in North America, indicating a clear separation of the European and American populations. However, within the latter lineage, there is no geographical structuring of the haplotypes corresponding to the vocal types described by Groth (1993a). In the Western Palaearctic, the same kind of genealogical pattern is found, with the distribution of haplotypes among the lineages (I to III) failing to correspond with any morphological features or subspecies distribution.

Discussion

Lineages distribution

The aim of this study was to test whether the subspecies or types of Common Crossbill (*L. curvirostra*) described in the literature match clear-cut mitochondrial lineages. By sequencing a segment of the rapidly evolving control region, we revealed a mixing of the mitochondrial lineages within continents, but some genetic structuring between continents. Some haplotypes are geographically widespread (A, B), others, such as the single haplotype (D) found in Majorca, are located in one place. The sample size is small and does not allow us to conclude that the isolated haplotypes do not occur elsewhere. However, we conclude that the mitochondrial lineages are not strictly related to individual types or subspecies. Increasing the sample size would give a larger haplotype diversity, but would be unlikely to change the mixed pattern of lineages at the geographical scale. Such a phylogeographical pattern is not unusual in birds where the majority of species do not show a clear genetic structure (Zink & Dittmann, 1993). Genetic homogeneity linked to a lack of geographical structure has been reported in the nomadic Redpoll (*Carduelis flammea*, Carduelinae) that shows extensive morphological

Table 2 Variable nucleotide positions between Crossbill haplotypes. Dots indicate sequence matching with haplotype A1. Dashes indicate insertion–deletion events

	Nucleotide position																													
Haplotype	51	56	69	102	130	168	179	220	248	408	467	469	472	475	512	542	547	582	588	609	612	619	623	628	631	638	652	654	672	694
A1	C	T	T	C	T	T	A	A	G	G	C	G	C	T	A	A	T	T	G	A	A	T	A	G	C	–	A	A	C	A
A2	·	·	·	·	·	·	·	·	·	·	·	·	·	·	·	·	·	·	·	·	·	·	·	·	·	–	·	–	·	·
B1	T	·	·	·	C	·	C	·	·	·	A	·	T	C	·	·	·	·	·	·	·	·	·	·	T	–	·	–	·	G
B2	T	·	·	·	C	·	C	·	·	·	A	·	T	C	·	·	·	·	·	·	·	·	·	·	T	–	·	·	·	G
C1	·	·	·	·	C	·	C	·	·	·	A	·	T	C	·	·	·	·	·	·	·	·	·	·	T	–	·	–	·	G
C2	·	·	·	·	C	·	C	·	·	·	A	·	T	C	·	·	·	·	·	·	·	·	·	·	T	–	·	·	·	G
D	·	·	·	·	·	·	·	·	·	·	·	·	·	·	·	·	·	·	·	·	·	·	·	A	·	–	·	·	·	·
E	·	·	·	·	·	C	·	T	·	A	·	C	·	·	·	·	·	·	·	·	·	·	G	·	T	–	·	–	·	·
F	·	·	·	G	·	C	·	·	·	·	·	·	·	·	·	·	·	·	·	·	·	·	G	·	T	–	·	·	·	·
G	T	·	·	·	C	·	C	·	·	·	A	·	T	C	·	·	·	·	A	·	·	C	·	·	T	–	·	·	·	G
H	T	·	A	·	C	·	C	·	·	·	A	·	T	C	·	·	·	·	·	·	·	·	·	·	T	–	·	–	·	G
I	T	·	·	·	C	·	C	·	·	·	A	·	T	C	·	·	·	·	A	·	·	·	·	·	T	–	·	–	·	G
J	·	C	·	G	·	·	·	·	·	·	·	·	·	·	·	·	·	·	·	·	·	·	G	·	T	–	·	–	·	·
K	·	·	·	G	·	C	·	·	·	·	·	·	·	·	·	·	·	·	A	·	·	·	G	·	T	–	·	–	·	·
L	·	C	·	A	·	·	·	·	·	·	·	·	·	·	·	·	·	·	·	·	·	·	·	·	·	–	·	·	·	·
M	·	·	·	G	·	·	·	·	·	·	·	·	·	·	·	·	·	·	·	·	·	·	G	·	T	–	·	·	·	·
N	·	·	·	G	·	C	·	·	·	·	·	·	·	·	·	·	·	·	·	·	·	·	G	·	T	–	·	·	T	·
O	·	C	·	·	·	·	·	·	·	·	·	·	·	·	·	·	·	·	·	·	·	·	·	·	·	–	·	·	·	·
P	·	·	·	·	·	·	·	·	·	·	·	·	·	·	·	·	·	·	·	·	·	·	·	·	·	–	·	·	·	G
Q	·	·	·	·	·	C	·	T	·	·	·	C	·	·	C	G	C	C	A	G	G	·	G	·	T	T	T	·	T	·
R	·	·	·	·	·	C	·	T	·	·	·	C	·	·	C	G	C	C	A	G	G	·	G	·	T	T	T	·	·	·
S	·	·	·	·	·	C	·	T	A	A	·	C	·	·	·	·	·	·	·	·	·	·	G	·	T	–	·	–	·	·

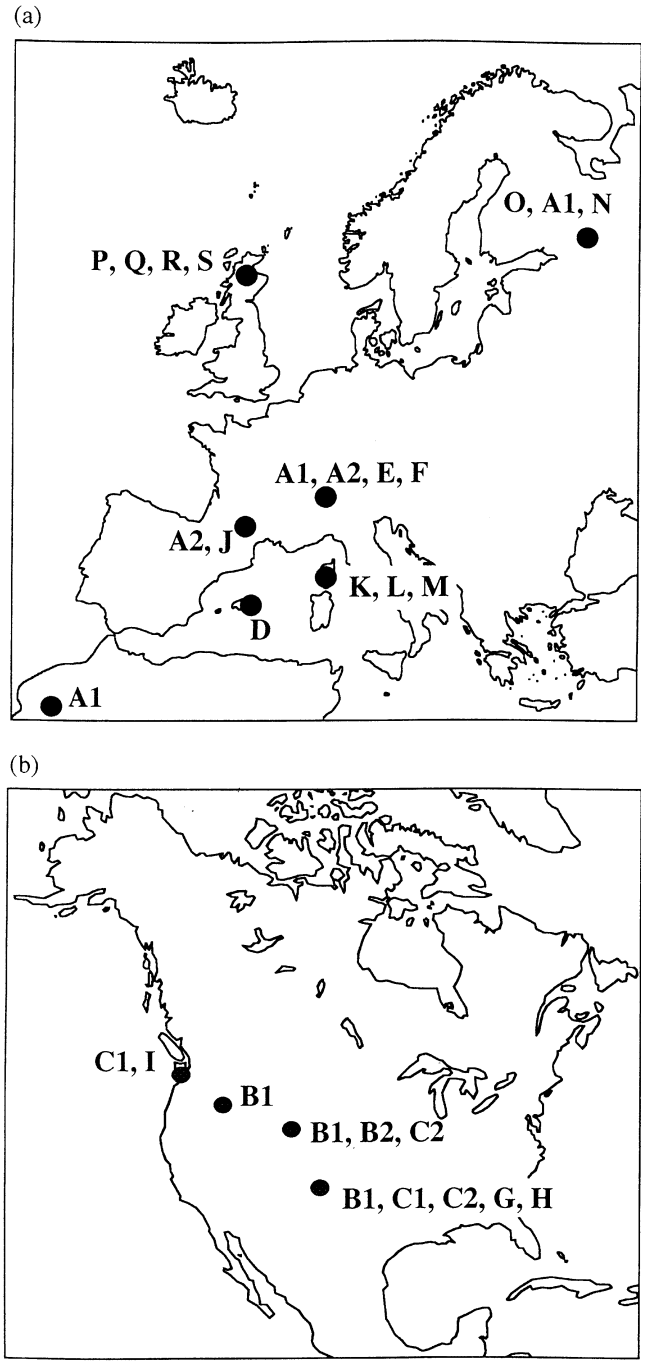

Fig. 1 Crossbill haplotypes distribution among the sampling sites. See Table 1 for haplotypes and their associated samples.

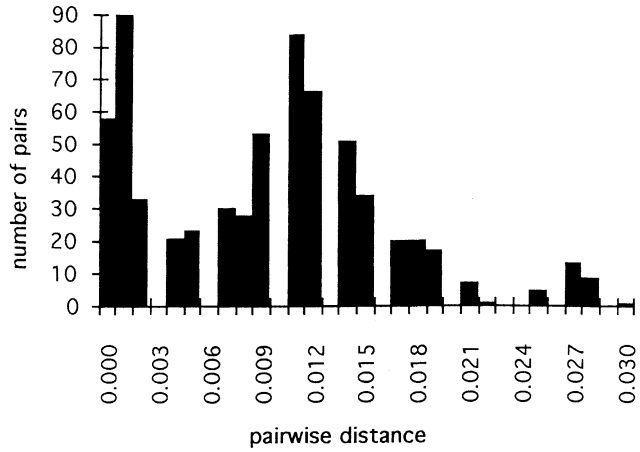

Fig. 2 Distribution of pairwise Kimura-2-parameter distances between all pairs of Crossbill individuals ($n = 666$).

variation across its breeding range (Seutin *et al.*, 1995). Extensive past or current gene flow, or retention of ancestral mtDNA polymorphism may account for the widespread mixing of mitochondrial lineages among the different morphological types (Zink & Dittmann, 1993; Seutin *et al.*, 1995). In the Common Crossbill, the extensive mixing of mitochondrial lineages can be explained by past and/or current gene flow. This nomadic bird is known to move widely in response to fluctuating seed production. Even if no case of interbreeding between local populations and invaders has been reported in the field (maybe because it is difficult to observe), cryptic mating could occur, promoting mitochondrial DNA introgression from one population to another.

Morphological and vocal evolution

The most striking example of a complete disconnection between haplotypes and morphological races is the continent-wide survey of the Song Sparrow (*Melospiza melodia*) (Zink & Dittmann, 1993). This species is one of the most polytypic passerine birds in North America with 34 subspecies described on the basis of morphological features (AOU, 1957). It is likely that morphological traits such as plumage coloration and size are not related to the genealogical history of a group. Often a faster evolution of morphology is noticed compared to mtDNA evolution (Zink & Dittmann, 1993; Questiau *et al.*, 1998). Selection, or rapid adaptation to the local environment, can act rapidly in the differentiation of morphs. Compared with other cardueline finches (such as the Redpoll), the Common Crossbill is less variable in morphology, except for bill shape and size, which can differ markedly between populations, depending on their diet and the synchrony of the phenology of coniferous trees (Benkman, 1993; Benkman & Miller, 1996). This variation in bill size could have emerged very rapidly: in populations where the single resource is pine seeds, it has been advantageous to develop a large, strong beak to extract seeds from cones (Lack, 1944; Benkman, 1993). One should also be aware that morphological variation may have an

(a)

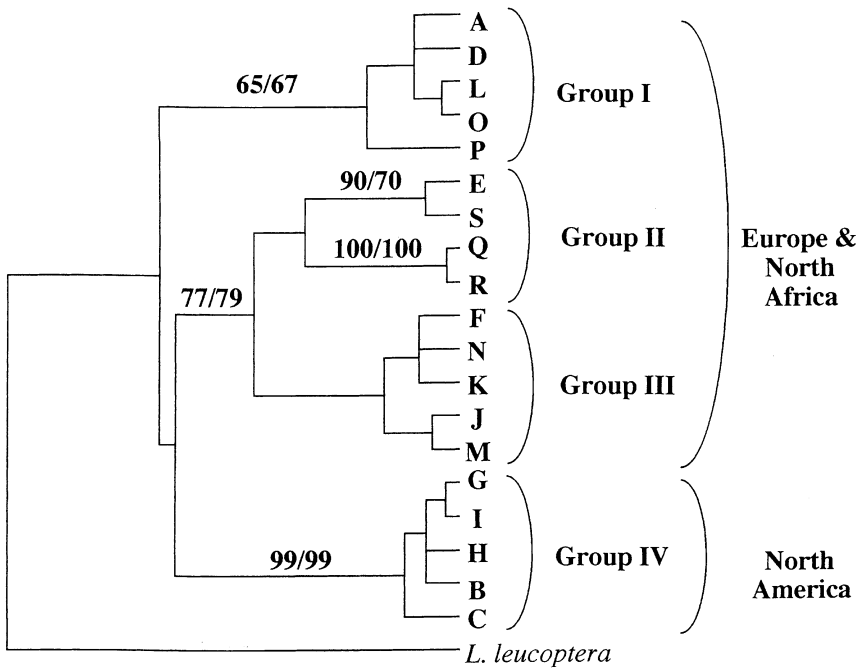

(b)

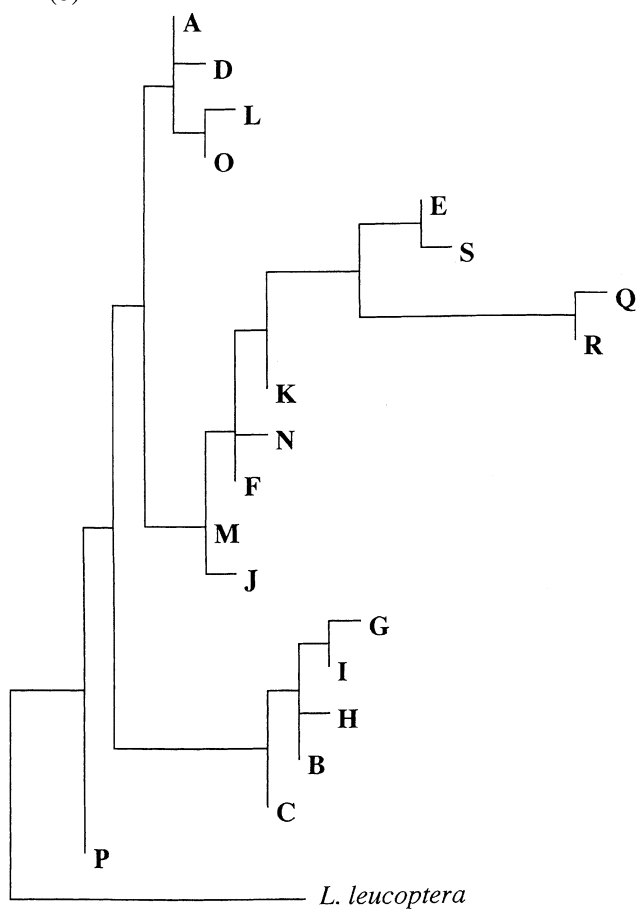

Fig. 3 (a) Maximum likelihood tree obtained with the molecular clock enforced for the Crossbill mitochondrial haplotypes; and (b) neighbour-joining tree. The numbers on the branches of the maximum likelihood tree indicate boostrap values obtained with: 2000 replicates with a neighbour-joining method (numerator); 1000 replicates with a parsimony method (denominator).

ecotypic component (i.e. a phenotypic but not genotypic response) and transplantation experiments are needed to control for this (James, 1983).

Some Common Crossbill races or populations have also been described on the basis of vocalizations such as flight calls (Groth, 1993a,b; Clouet & Joachim, 1996). Vocalizations are thought to enhance genetic differentiation, although there is little evidence for this; for example, Baker & Mewaldt (1978) reported that another acoustic trait (dialect) reduced dispersal in the White-crowned Sparrow (*Zonotrichia leucophrys*). As a consequence, this could promote genetic differentiation. However, the effects of dialects on mate selection were not investigated in this study and further details are needed to control for a possible assortative mating promoting divergence. Our results show that vocal types do not match any mitochondrial lineage. The same result was obtained for the Rufous-collared Sparrow (*Zonotrichia capensis*), whose populations are differentiated by their dialects (Lougheed *et al*., 1993). Knowing their labile state, we feel that flight calls are unlikely to play a consistent role in genetic differentiation, as is usually thought. In fact, most of vocal features such as dialects, songs or flight calls are thought to be learned (Mundinger, 1970, 1979; Lougheed *et al*., 1993). There is some evidence that flight calls in finches can be learned by imitation (Mundinger, 1970). The observation that captive Common Crossbills with different calls did not change their flight calls, even after several months (Groth, 1993b), does not rule out a call-learning capacity in the wild. Flight calls may function as a rallying signal in gregarious bird species, creating social cohesion in the flock, without any evolutionary consequences. It thus seems that unravelling intraspecific taxonomic status using acoustic features is not always appropriate. However, such traits were successfully correlated to mitochondrial lineages in the case of two allopatric populations of the Chiffchaff (*Phylloscopus collybita*, Helbig *et al*., 1993) but there was no evidence of assortative mating in relation to the song in the contact zone.

Divergence between lineages

The mean pairwise distance between the haplotypes (0.0118 ± 0.0069) is larger than that calculated for other cardueline finches such as the European Greenfinch (*Carduelis chloris*) (0.0039 between control region haplotypes; Merilä *et al*., 1997), even when calculated for European Crossbill lineages alone (0.0089 ± 0.0060). The Greenfinch suffered bottlenecks during the Pleistocene that account for its small divergences and low haplotype diversity. Similarly, Redpolls are more similar than crossbills, suggesting their recent divergence (Seutin *et al*., 1995). The bigger distances of Crossbills suggest a longer history. Some haplotypes might have emerged in isolation, for example in small populations following irruptive movements leading to founder events, as indicated by their large calculated pairwise distances. It would be unsafe to calculate effective population size using the small sample size that we have studied, and the limited knowledge of the noncoding control region's evolutionary rate. We therefore do not discuss here the historical demographic aspects. It is surprising that the two Scottish individuals (haplotypes Q and R) are so distant from the other haplotypes (distances ranging from 0.0127 to 0.0301, of similar magnitude to that between the outgroup *L. leucoptera* and the *curvirostra* haplotypes). In Scotland, an endemic Crossbill species (*Loxia scotica*) inhabiting Scots pine (*Pinus sylvestris*) forests has been described (Knox, 1976; Cramp & Perrins, 1994, pp. 686–717), and so an explanation could be linked to the potential introgression of the *scotica* mtDNA into *curvirostra* birds, despite the fact that no evidence of interbreeding between them in the field has been reported (Knox, 1990). This hypothesis has to be resolved by a more comprehensive survey of genetic differences between these two sympatric forms.

In conclusion, this study highlights the contradictions between a classification based on morphological and acoustic features, and the molecular phylogeny. As the mitochondrial lineages sometimes invalidate the monophyly of predicted subspecies, it can be misleading to enlarge the lists of intraspecific variation by giving subspecific status to local ecologically adapted forms. For the Common Crossbill, we have revealed the monophyly of the European and the American populations. However, potential gene flow between American and Eurasian populations through Beringia cannot be excluded (Zink *et al*., 1997) and further studies are needed to assess the consistency or the potential taxonomic division of this species. The existence of different morphotypes at the continental level is not questioned here. They represent a wide range of local adaptation, especially in species constrained to a single resource, such as coniferous seeds. In this case, the selective pressures are sufficiently strong to trigger and enhance morphological evolution, but without necessarily promoting speciation events through the development of reproductive barriers.

Acknowledgements

We thank Dr C. W. Benkman and Dr S. B. Piertney for providing samples from North America and Scotland, respectively, and for their helpful comments on the first manuscript. We thank the two anonymous referees for

their constructive remarks. Professor G. A. Noskov provided samples from Russia. We are grateful to Mr J. Mayol and Mr M. Rebassa-Beltran for their help in Majorca. We also thank Dr E. Pasquet for the sample of *Loxia leucoptera* used as the outgroup in this study and Mrs C. Dubois-Paganon for her technical contribution in the DNA extractions. This survey was supported by the Centre National de la Recherche Scientifique and by the University Joseph Fourier in Grenoble. The control region sequences can be found in the EMBL sequence data base under the accession numbers AJ005703 to AJ005725.

References

AMERICAN ORNITHOLOGISTS' UNION 1957. *Check-List of North American Birds,* 5th edn. American Ornithologists' Union, Washington, DC.

AVISE, J. C. AND BALL, R. M. 1990. Principles of genealogical concordance in species concepts and biological taxonomy. In: Futuyama, D. and Antonovics, J. (eds) *Oxford Surveys in Evolutionary Biology*, Vol. 7, pp. 45–67. Oxford University Press, New York.

AVISE, J. C., ARNOLD, J., BALL, R. M., BERMINGHAM, E., LAMB, T., NEIGEL, J. E. *ET AL.* 1987. Intraspecific phylogeography: the mitochondrial DNA bridge between population genetics and systematics. *Ann. Rev. Ecol. Syst.*, **18**, 489–522.

BAKER, M. C. AND MEWALDT, L. R. 1978. Song dialects as barriers to dispersal in white-crowned sparrows, *Zonotrichia leucophrys nuttalli*. *Evolution*, **32,** 712–722.

BALL, R. M., FREEMAN, S., JAMES, F. C., BERMINGHAM, E. AND AVISE, J. C. 1988. Phylogeographic population structure of red-winged blackbirds assessed by mitochondrial DNA. *Proc. Natl. Acad. Sci. U.S.A.*, **85**, 1558–1562.

BENKMAN, C. W. 1993. Adaptation to single resources and the evolution of crossbill (*Loxia*) diversity. *Ecol. Monogr.*, **63**, 305–325.

BENKMAN, C. W. AND MILLER, R. E. 1996. Morphological evolution in response to fluctuating selection. *Evolution*, **50**, 2499–2504.

CLOUET, M. AND JOACHIM, J. 1996. Premiers éléments de comparaison de trois populations françaises de beccroisés *Loxia curvirostra*. *Alauda*, **64**, 149–155.

CRACRAFT, J. 1983. Species concepts and speciation analysis. *Curr. Ornithol.*, **1**, 159–187.

CRAMP, S. AND PERRINS, C. M. 1994. *The Birds of the Western Palearctic*, Vol. VIII. Oxford University Press, Oxford.

GRISCOM, L. 1937. A monograph study of the Red Crossbill. *Proc. Boston Soc. Nat. Hist.*, **41**, 77–210.

GROTH, J. G. 1993a. Evolutionary differentiation in morphology, vocalisations and allozymes among nomadic sibling species in the North American red crossbill (*Loxia curvirostra*) complex. *Univ. Calif. Publ. Zool.*, **127**, 1–143.

GROTH, J. G. 1993b. Call matching and positive assortative mating in Red Crossbills. *Auk*, **110**, 398–401.

HELBIG, A. J., SALOMON, M., WINK, M. AND BRIED, J. 1993. Absence de flux génique mitochondrial entre les Pouillots 'véloces' médio-européen et ibérique (Aves: *Phylloscopus collybita collybita*, *P.* (*c*) *brehmii*); implications taxonomiques. Résultats tirés de la PCR et du séquençage d'ADN. *C. R. Acad. Sci. Paris*, **316**, 205–210.

JAMES, F. C. 1983. Environmental component of morphological differentiation in birds. *Science*, **221**, 184–186.

KNOX, A. G. 1975. Crossbill taxonomy. In: Nethersole-Thomson, D. (ed.) *Pine Crossbills*, pp. 191–201. T. & A. D. Poyser, Berkhamsted.

KNOX, A. G. 1976. The taxonomic status of the Scottish crossbill *Loxia* sp. *Bull. Brit. Orn. Cl.*, **96,** 15–19.

KNOX, A. G. 1990. The sympatric breeding of Common and Scottish Crossbills *Loxia curvirostra* and *L. scotica* and the evolution of crossbills. *Ibis*, **132**, 454–466.

LACK, D. 1944. Correlation between beak and food in the crossbill, *Loxia curvirostra* Linnaeus. *Ibis*, **86**, 552–553.

LOUGHEED, S. C. AND HANDFORD, P. 1992. Vocal dialects and the structure of geographic variation in morphological and allozymic characters in the Rufous-collared Sparrow, *Zonotrichia capensis*. *Evolution*, **46**, 1443–1456.

LOUGHEED, S. C., HANDFORD, P. AND BAKER, A. J. 1993. Mitochondrial DNA hypervariability and vocal dialects in a subspecies transition of the Rufous-collared Sparrow. *Condor*, **95**, 889–895.

MERILÄ, J., BJÖRKLUND, M. AND BAKER, A. J. 1997. Historical demography and present day population structure of the greenfinch, *Carduelis chloris*—an analysis of mtDNA control-region sequences. *Evolution*, **51**, 946–956.

MUNDINGER, P. C. 1970. Vocal imitation and individual recognition in finch calls. *Science*, **168**, 480–482.

MUNDINGER, P. C. 1979. Call learning in the Carduelinae: Ethological and systematic implications. *Syst. Zool.*, **28**, 270–283.

NEWTON, I. 1972. *Finches*. Collins, London.

QUESTIAU, S., EYBERT, M.-C., GAGINSKAYA, A. R., GIELLY, L. AND TABERLET, P. 1998. Recent divergence between two morphologically differentiated subspecies of bluethroat (Aves: Muscicapidae: *Luscinia svecica*) inferred from mitochondrial DNA sequence variation. *Mol. Ecol.*, **7**, 239–245.

SENAR, J. C., BORRAS, A., CABRERA, T. AND CABRERA, J. 1993. Testing for the relationship between coniferous crops stability and common crossbills residence. *J. Field Ornithol.*, **64**, 464–469.

SEUTIN, G., KLEIN, N. K., RICKLEFS, R. E. AND BERMINGHAM, E. 1994. Historical biogeography of the bananaquit (*Coereba flaveola*) in the Caribbean region: a mitochondrial DNA assessment. *Evolution*, **48**, 1041–1061.

SEUTIN, G., RATCLIFFE, L. M. AND BOAG, P. T. 1995. Mitochondrial DNA homogeneity in the phenotypically diverse redpoll finch complex (Aves: Carduelinae: *Carduelis flammea-hornemanni*). *Evolution*, **49**, 962–973.

SHIELDS, G. F. AND WILSON, A. C. 1987. Subspecies of the Canada goose (*Brianta canadensis*) have distinct mitochondrial DNA. *Evolution*, **41**, 662–666.

SWOFFORD, D. L., OLSEN, G. J., WADDELL, P. J. AND HILLIS, D. M. 1996. Phylogenetic inference. In: Hillis, D.M., Moritz, C. and Mabble, B.K. (eds) *Molecular Systematics*, pp. 407–514. Sinauer Associates, Sunderland, MA.

TABERLET, P., MEYER, A. AND BOUVET, J. 1992. Unusual mitochondrial DNA polymorphism in two local populations of blue tit *Parus caerulus*. *Mol. Ecol.*, **1,** 27–36.

TARR, C. L. 1995. Primers for amplification and determination of mitochondrial control-region sequences in oscine passerines. *Mol. Ecol.*, **4**, 527–529.

VAURIE, C. 1959. *The Birds of Palearctic Fauna*. Witherby, London.

ZINK, R. M. AND DITTMANN, D. L. 1993. Gene flow, refugia, and evolution of geographic variation in the song sparrow (*Melospiza melodia*). *Evolution*, **47**, 717–729.

ZINK, R. M., ROHWER, S., ANDREEV, A. V. AND DITTMANN, D. L. 1997. Trans-Beringia comparisons of mitochondrial DNA differentiation in birds. *Condor*, **97**, 639–649.