European Journal of Human Genetics (2003) 11, 352–356

www.nature.com/ejhg

SHORT REPORT

Skewed X chromosome inactivation in carriers is not a constant finding in FG syndrome

Martine Raynaud*[,1], Sabine Dessay[1], Nathalie Ronce[1], John Opitz[2], Marcus Pembrey[3], Corrado Romano[4], Claude Moraine[1] and Sylvain Briault[1]

[1]*Service de Génétique et INSERM U316, Hôpital Bretonneau, 37044 Tours Cedex 1, France;* [2]*Division of Medical Genetics, Salt Lake City, UT, USA;* [3]*Department of Clinical Genetics, London, UK;* [4]*Department of Pediatrics, Troina, Italia*

Genetic heterogeneity has been demonstrated in FG syndrome. We report a systematic study of the X-inactivation profile of obligate carriers and other females in FG pedigrees. It was expected that the characterization of particular X-inactivation profiles in carriers in some families might be related to the same mutated gene. Analysis of the X-inactivation profiles in carriers demonstrated different profiles but no correlation was found with the results of the linkage study.
European Journal of Human Genetics (2003) **11,** 352–356. doi:10.1038/sj.ejhg.5200959

Keywords: skewed X-inactivation; XLMR carriers; mental retardation; FG syndrome

Introduction

Briault *et al*[1] demonstrated apparent genetic heterogeneity in FG syndrome families (OMIM 305450) from a linkage analysis of 10 families: one gene (FGS1) was assigned to the Xq12-Xq21.31 region, and linkage to FGS1 was excluded in three of the 10 families. Three additional families described by Graham *et al*[2] supported the FGS1 localization. Briault *et al*[3,4] described a paracentric inversion of the X chromosome inv(X)(q11q28) associated with apparent FG syndrome in another family and confirmed heterogeneity of the FG syndrome (FGS2). Moreover, another localization (Xpter-Xp22.3) was suggested by the study of two families[5] (FGS3) (Figure 1).

Extremely skewed X-inactivation is constant in carriers in some X-linked disorders and this is thought to result from a proliferation or survival advantage of cells expressing the normal allele over cells expressing the mutated allele. We previously[6] reported the systematic study of X-inactivation in 19 multiplex XLMR pedigrees: extremely skewed profile (85%:15%–100%:0%) was observed in all carriers in three of the 19 families and a common mechanism was thought to explain the extremely skewed X-inactivation profiles in leukocytes. In FG syndrome, Graham *et al*[2] noted skewed X-inactivation in carrier females in the families they reported to be linked to FGS1. We performed the systematic study of X-inactivation in obligate carriers and other females in FG pedigrees. It was expected that the characterization of a particular X-inactivation profile in carriers in some families might be related to the same mutated gene.

Materials and methods

In total, 16 multiplex FG pedigrees (at least two affected subjects) were analysed for X-inactivation profile. The diagnosis was made by physicians according to the criteria of Thompson and Baraitser.[7] All females in each family, whether obligate carriers or of unknown status, were investigated for X-inactivation when DNA was available. One female was affected in three families (20246, 21826 and 28438 in Figure 2).

Genomic DNA was isolated from white blood cells by a standard high salt precipitation procedure. An X chromosome inactivation analysis was performed at the androgen

*Correspondence: Dr M Raynaud, Service de Génétique et Inserm U316, Hôpital Bretonneau, 2 bd Tonnellé, 37044 Tours Cedex 1, France. Tel: +33-(0)–2 474747 99 Fax: +33 (0) 2 474786 53;
E-mail raynaud@med.univ-tours.fr
Received 23 July 2001; revised 6 January 2003; accepted 8 January 2003

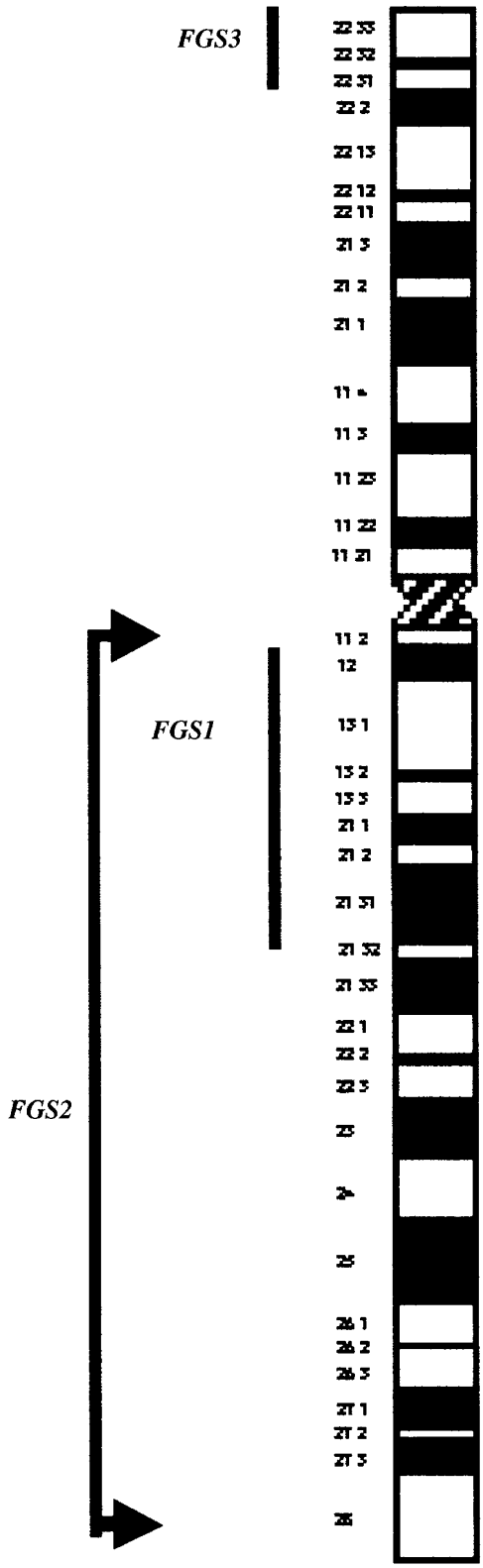

Figure 1 There are at least three gene localizations for FG syndrome: FGS1 (Xq12-Xq21.31), FGS2 (Xq11 or Xq28) and FGS3 (Xpter-Xp22.3).

receptor (AR) locus as described by Allen *et al*[8] except that α-^{33}P dCTP was added to the PCR mix instead of α-^{32}P dCTP. In some cases, allelic fragments differed by only one repeat and the additional bands that resulted from DNA strand slippage during amplification made it impossible to analyse the relative intensity (NA) of each fragment. In others, the microsatellite was not informative (NI). The same analysis was performed at the FMR 1 locus in these cases (NI or NA), as described by Carrel and Willard.[9]

In both assays, the density of the bands was quantitated visually and by image analysis of the autoradiographs (software package Bioprofil, Vilber Lourmat system, Vilber Lourmat, Torcy BP 66, 77202 Marnes La Vallee Cedex, France), and the density ratios in each allele were calculated. The results were taken into account only when the two alleles were of the same density when amplified without predigestion with *Hp*aII (50%:50%–55%:45%).

Results

The study was performed in 45 females from 16 multiplex families. The AR microsatellite was not informative in 11 females and was not analysable in 5 other females. The results are shown in Figure 2 for the 14 families with at least one informative female. Ages at the time blood samples were taken are specified for each female when known. The X-inactivation profiles were random or moderately skewed in all carriers in seven families, and extremely skewed only in certain carriers in three families (22023, 24972 and 28672). However, there might have been a particular X-inactivation profile in four other families (framed in Figure 2) as it was extremely skewed in all available carriers.

Discussion

The X-inactivation profiles in carriers demonstrated two groups in the FG syndrome families:

(1) Extremely skewed X-inactivation was not constant in carriers in 10 families (Figure 2). FGS1 was not excluded for some of these families, whereas in four of them this region was excluded (families 20246 = family 10 in Briault *et al*,[1] 22023 = family 9 in Briault *et al*,[1] 28652 and 28672). The two point lod scores obtained at $\theta = 0$ for some of the X chromosome markers tested for the FGS1 and FGS3 loci are listed in Table 1.

(2) The X-inactivation profiles were extremely skewed in carriers in four families (framed in Figure 2). Four main explanations for extremely skewed X-inactivation are to be discussed. (i) Of 365, 9% 'normal' females were found to have more than 90% of lymphocytes with the same active chromosome in Naumova's[10] study. As explained by Martinez,[11] the probability of extremely skewed X-inacti-

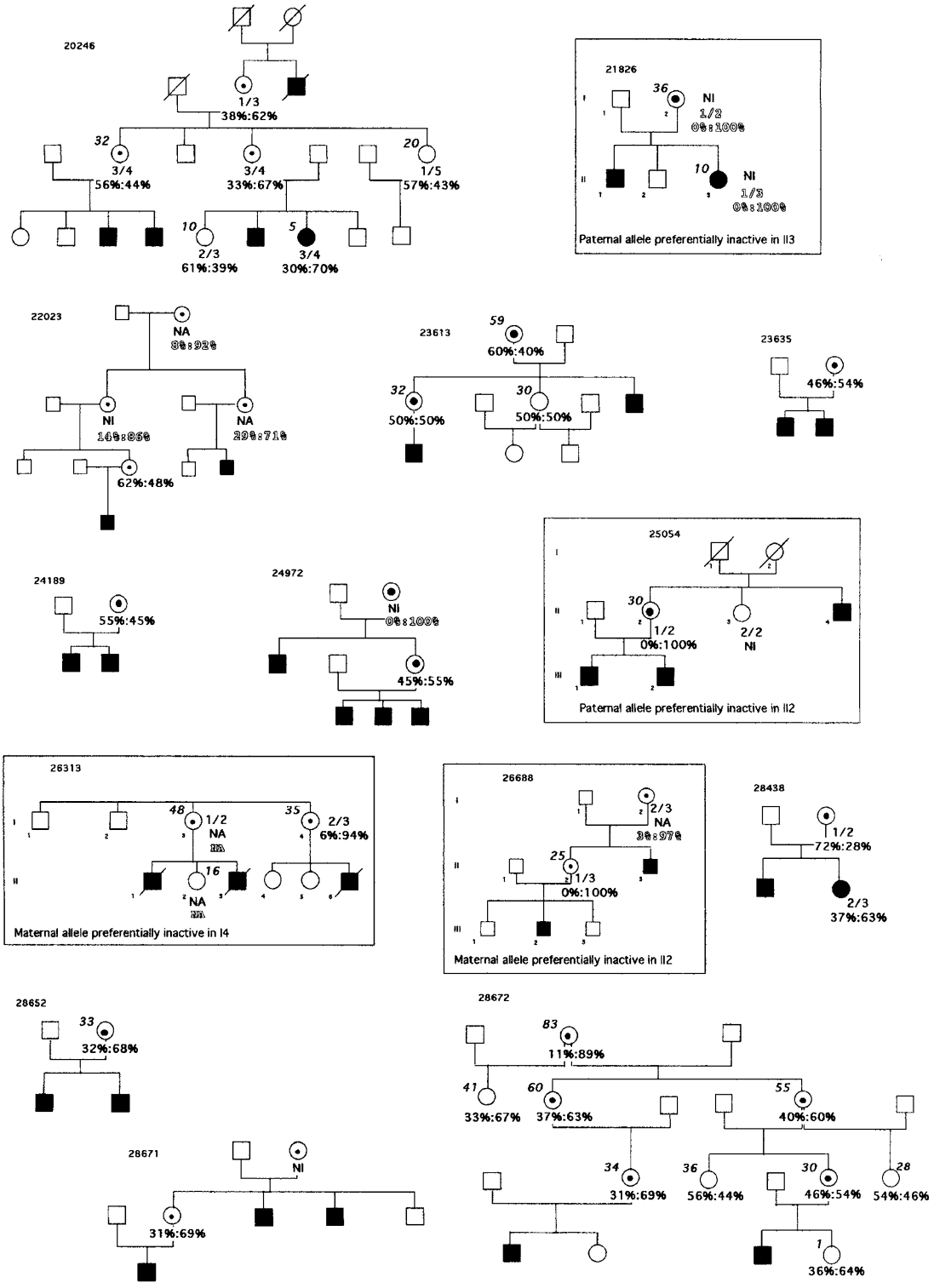

Figure 2 Results of X chromosome inactivation analysis in 14 FG families (in order of family numbers). AR locus: bold type. FMR 1 locus: framed type. NA: not analysable, NI: not informative. Ages at time blood samples were taken are specified in italics when known. Alleles are numbered arbitrarily in each family and numbers are presented on the figure when it is of interest, followed by the density ratios of each allele. The four families with extremely skewed X-inactivation profiles suspected in carriers are framed and it is noted if the paternal or maternal allele was preferentially inactivated. Standard nomenclature is used for all symbols.

Table 1 Two-point lod scores obtained at θ=0 for X-chromosome makers of the FGS1 and FGS3 regions in 13 of the 14 families of Figure 2 (patients deceased in family 26313: no linkage study

		Two-point lod scores obtained at θ=0 for family												
Markers	*Localization*	*20246*	*21826*	*22023*	*23613*	*23635*	*24189*	*24972*	*25054*	*26688*	*28438*	*28652*	*28671*	*28672*
FGS3 region														
DXS1060	Xp22.32	$-\infty$	ui	1.51	$-\infty$	$-\infty$	ui	$-\infty$	$-\infty$	$-\infty$	$-\infty$	0.3	$-\infty$	1.2
Kallmann	Xp22.32	$-\infty$	—	—	—	—	—	—	—	$-\infty$	—	ui	—	$-\infty$
DXS987	Xp22.31	$-\infty$	$-\infty$	$-\infty$	0.43	ui	$-\infty$	$-\infty$	$-\infty$	$-\infty$	ui	$-\infty$	$-\infty$	0.6
DXS1053	Xq22.2	—	—	—	—	—	—	—	—	—	$-\infty$	—	—	0.6
DXS418	Xp22.2	—	—	—	$-\infty$	$-\infty$	0.3	$-\infty$	$-\infty$	0.6	ui	$-\infty$	$-\infty$	$-\infty$
FGS1 region														
DXS339	Xq12	$-\infty$	$-\infty$	—	—	—	—	—	ui	—	—	—	$-\infty$	$-\infty$
DXS453	Xq12	—	$-\infty$	$-\infty$	—	$-\infty$	—	—	—	—	—	—	—	—
DXS227	Xq13.2	$-\infty$	$-\infty$	0.60	—	—	—	—	—	$-\infty$	—	—	—	—
DXS441	Xq13.2	$-\infty$	ui	0.60	$-\infty$	$-\infty$	—	$-\infty$	ui	ui	ui	$-\infty$	0.3	$-\infty$
DXS56	Xq13.3	$-\infty$	ui	$-\infty$	—	—	—	—	—	0.6	—	—	—	—
DXS986	Xq21	$-\infty$	$-\infty$	0.60	$-\infty$	$-\infty$	0.3	$-\infty$	$-\infty$	0.6	$-\infty$	ui	ui	$-\infty$
DXS1002	Xq21	ui	$-\infty$	$-\infty$	$-\infty$	$-\infty$	ui	$-\infty$	$-\infty$	0.6	ui	$-\infty$	$-\infty$	0.6
DXS3	Xq21.33	$-\infty$	$-\infty$	$-\infty$	—	—	—	—	—	—	—	—	—	—
DXS990	Xq21.33	$-\infty$	$-\infty$	0.60	$-\infty$	0.3	0.3	1.51	$-\infty$	$-\infty$	$-\infty$	$-\infty$	$-\infty$	$-\infty$
DXS178	Xq22.1	$-\infty$	$-\infty$	$-\infty$	$-\infty$	—	—	—	—	—	—	—	—	—
Max expected lod score		1.93	0.6	1.51	0.73	0.3	0.3	1.51	0.9	0.9	0.3	0.3	1.2	1.51

ui=uninformative; —=not tested.

vation occurring by chance in a number of females in the same family is weak: only one carrier could be analysed in two families (25054 and 26313), and it could not be excluded that extremely skewed X-inactivation might have occurred by chance. (ii) X-autosome translocation and large deletions were excluded by karyotype for all four families. (iii) The incidence of severe skewing increases with age, occurring in 16% of women over 60 years.[12] However, in our study severe skewing occurred in females below 60 years and resulted probably from a different mechanism (see ages in framed families Figure 2; age at the time blood samples were taken is unknown for carrier II2 in family 26688, but her daughter was 25 years). (iv) Another explanation for extremely skewed X-inactivation that is constant in carriers is that a proliferation or survival advantage might exist for cells expressing the normal allele over cells expressing the mutated allele. In two families, the paternal allele was preferentially inactive in carriers (carrier II2 in family 25054 and carrier II3 in family 21826, Figure 2) and therefore extremely skewed X-inactivation did not occur for the chromosome associated with the disease, and a selection mechanism against cells in which the mutant allele is located on the X chromosome can be excluded. In two families (26313 and 26688), the maternal allele was preferentially inactive in the two females in whom this could be determined, and extremely skewed inactivation may reflect the segregation of a defect influencing cell survival or proliferation. For family 26688 linkage to FGS1 was not excluded, and linkage to FGS3 was excluded (Table 1); linkage study could not be performed in family 26313 (patients deceased).

There is strong evidence that the penetrance of mental retardation in carrier females may be related to the randomness or skewing of X-inactivation in critical tissues, whether determined stochastically or genetically.[13] There were three manifesting carriers in three different families (20246, 21826 and 28438): X-inactivation may be correlated with the phenotype in blood cells if the parental origin of alleles would reveal preferential inactivation of the maternal chromosome in the asymptomatic females and preferential inactivation of the paternal chromosome in the symptomatic ones. Other tissues like brain would be more relevant to the phenotypic expression.

Analysis of X-inactivation in blood cells in carriers in the present study demonstrated different profiles (extremely skewed in carriers, probably as a result of the detrimental effects of having the gene active, in two families, or variable in carriers as in normal women in the other families) but there was no correlation with the gene localization study and it was of no help to sort the FG families.

Acknowledgements

We thank the families for their cooperation, Marie-Noëlle Marson for technical assistance and Brigitte Jauffrion for lymphoblastoid cell lines. We also thank Doreen Raine for editing the English language and Professor Alain Goudeau for allowing the use of his densitometer. This work was partly supported by the INSERM PROGRES network.

References

1 Briault S, Hill R, Shrimpton A *et al*: A gene for FG syndrome maps in the Xq12-q21.31 region. *Am J Med Genet* 1997; **73**: 87–90.
2 Graham Jr, JM, Tackels D, Dibbern K *et al*: FG syndrome: report of three new families with linkage to Xq12-q22.1. *Am J Med Genet* 1998; **80**: 145–156.
3 Briault S, Odent S, Lucas J *et al*: Paracentromeric inversion of the X chromosome [inv(X)(q12q28)] in familial FG syndrome. *Am J Med Genet* 1999; **86**: 112–114.
4 Briault S, Villard L, Rogner U *et al*: Mapping of X chromosome breakpoints [inv(X)(q11q28)] associated with FG syndrome: a second FG locus [FGS2]?. *Am J Med Genet* 2000; **95**: 178–181.
5 Dessay S, Moizard MP, Gilardi JL *et al*: FG syndrome: linkage analysis in two families supporting a new gene localization at Xp22.3 [FGS3]. *Am J Med Genet* 2002; **112**: 6–11.
6 Raynaud M, Moizard MP, Dessay B *et al*: Systematic analysis of X-inactivation in 19 XLMR families: extremely skewed profiles in carriers in 3 families. *Eur J Hum Genet* 2000; **8**: 253–258.
7 Thompson E, Baraitser M: FG syndrome. *J Med Genet* 1987; **24**: 139–143.
8 Allen RC, Zoghbi HY, Moseley AB, Rosenblatt HM, Belmont JW: Methylation of *Hp*aII and *Hh*aI sites near the polymorphic CAG repeat in the human androgen-receptor gene correlates with X chromosome inactivation. *Am J Hum Genet* 1992; **51**: 1229–1239.
9 Carrel L, Willard HF: An assay for X inactivation based on differential methylation at the fragile X locus, FMR I. *Am J Med Genet* 1996; **64**: 27–30.
10 Naumova AK, Plenge RM, Bird LM *et al*: Heritability of X chromosome-inactivation phenotype in a large family. *Am J Hum Genet* 1996; **58**: 1111–1119.
11 Martinez F, Tomas M, Millan JM, Fernandez A, Palau F, Prieto F: Genetic localisation of mental retardation with spastic diplegia to the pericentromeric region of the X chromosome: X inactivation in female carriers. *J Med Genet* 1998; **35**: 284–287.
12 Sharp A, Robinson D, Jacobs P: Age- and tissue-specific variation of X chromosome inactivation ratios in normal women. *Hum Genet* 2000; **107**: 343–349.
13 Willard HF: X chromosome inactivation and X-linked mental retardation. *Am J Med Genet* 1996; **64**: 21–26.